Logic & Schematic Diagram
Diskette Drive
Models 270/272/277

This Document was scanned and contributed by:

Barry A. Watzman

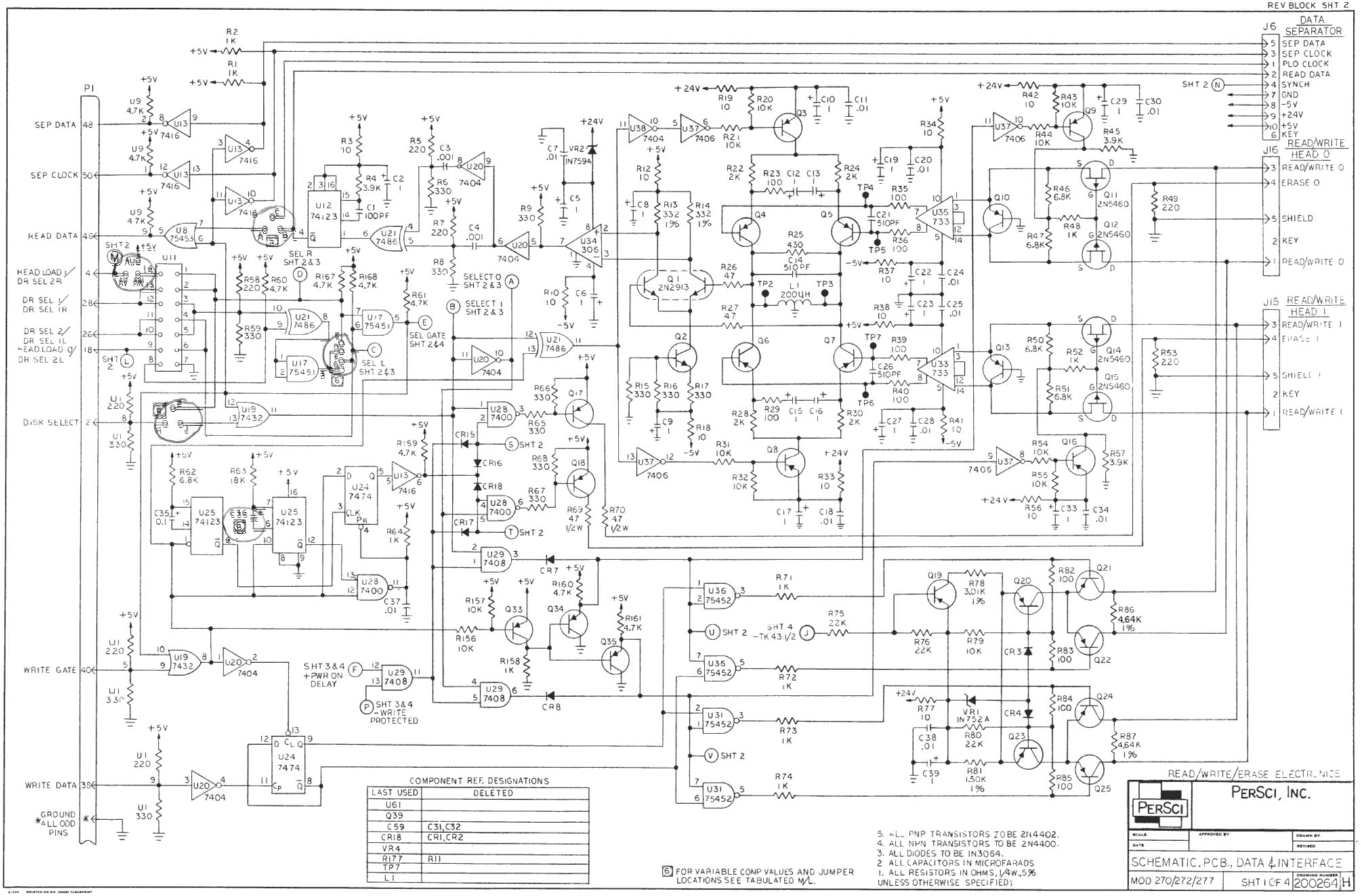
REV BLOCK SHT 2
P1
J6 DATA SEPARATOR
5 SEP DATA
3 SEP CLOCK
1 PLO CLOCK
2 READ DATA
4 SYNCH
7 GND
8 -5V
9 +24V
10 +5V
6 KEY
J16 READ/WRITE HEAD 0
3 READ/WRITE 0
4 ERASE 0
5 SHIELD
2 KEY
1 READ/WRITE 0
J15 READ/WRITE HEAD 1
3 READ/WRITE 1
4 ERASE 1
5 SHIELD 1
2 KEY
1 READ/WRITE 1
SEP DATA 48
SEP CLOCK 50
READ DATA 46
HEAD LOAD 1 / DR SEL 2R 4
DR SEL 1 / DR SEL 1R 28
DR SEL 2 / DR SEL 1L / HEAD LOAD 0 / DR SEL 2L 26
DISK SELECT 2
WRITE GATE 40
WRITE DATA 38
GROUND *ALL ODD PINS *
SEL R SHT 2&3
SELECT 0 SHT 2&3
SELECT 1 SHT 2&3
SEL GATE SHT 2&4
SEL L SHT 2&3
SHT 3&4 +PWR ON DELAY
SHT 3&4 -WRITE PROTECTED
SHT 4 -TK43 1/2
SHT 2
COMPONENT REF. DESIGNATIONS
LAST USED | DELETED
U61 |
Q39 |
C59 | C31,C32
CR18 | CR1,CR2
VR4 |
R177 | R11
TP7 |
L1 |
6 FOR VARIABLE COMP VALUES AND JUMPER LOCATIONS SEE TABULATED M/L.
5. ALL PNP TRANSISTORS TO BE 2N4402.
4. ALL NPN TRANSISTORS TO BE 2N4400.
3. ALL DIODES TO BE IN3064.
2 ALL CAPACITORS IN MICROFARADS
1. ALL RESISTORS IN OHMS, 1/4W, 5% UNLESS OTHERWISE SPECIFIED;
READ/WRITE/ERASE ELECTRONICS
PERSCI, INC.
SCHEMATIC. PCB., DATA & INTERFACE
MOD 270/272/277
SHT 1 OF 4
DRAWING NUMBER 200264 H

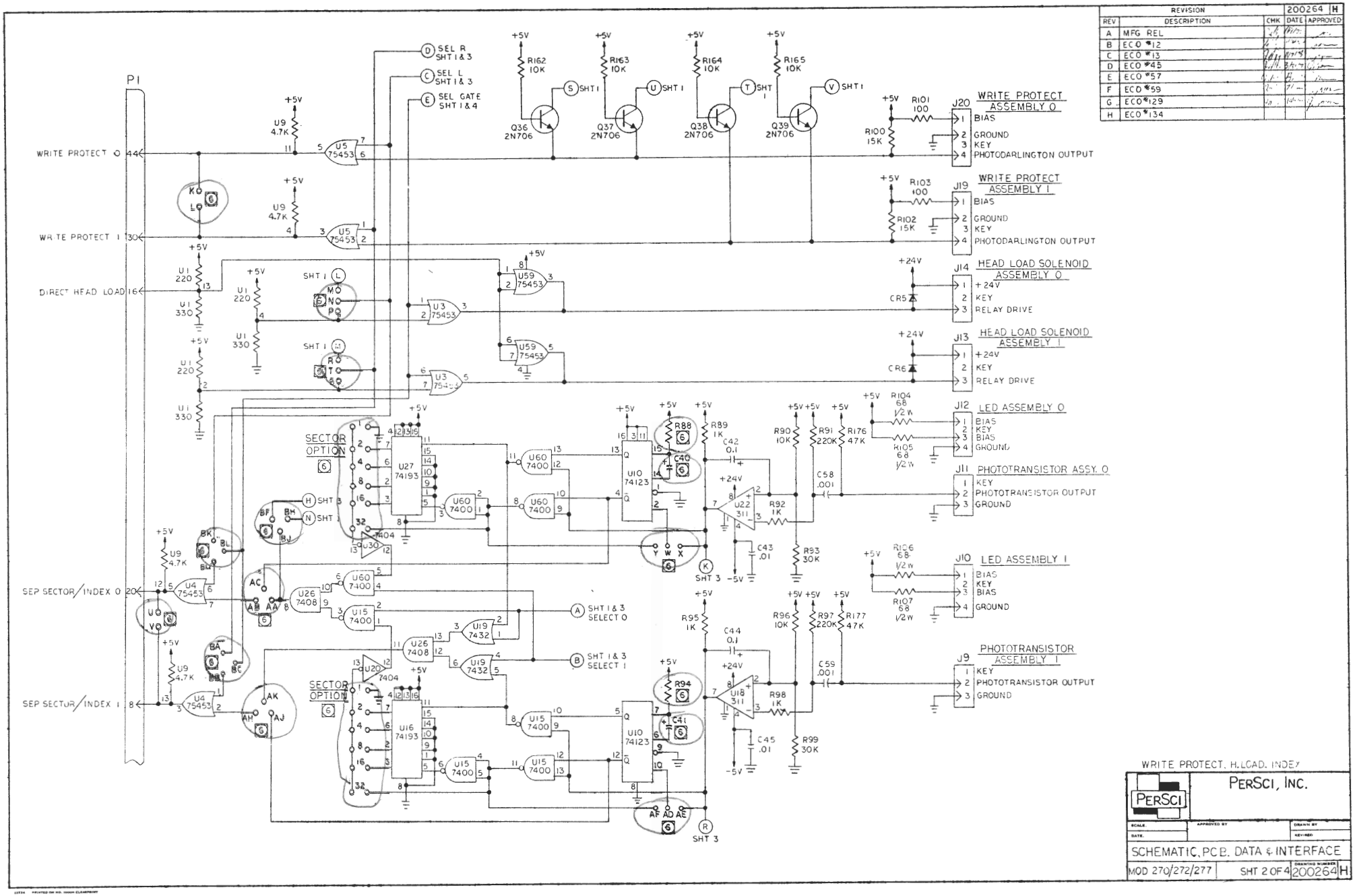

REVISION			200264	H
REV	DESCRIPTION	CHK	DATE	APPROVED
A	MFG REL			
B	ECO #12			
C	ECO #13			
D	ECO #45			
E	ECO #57			
F	ECO #59			
G	ECO #129			
H	ECO #134			

WRITE PROTECT, H.LOAD, INDEX

PERSCI, INC.

SCALE | APPROVED BY | DRAWN BY
DATE | | KEYNED

SCHEMATIC, PC B. DATA & INTERFACE

MOD 270/272/277 | SHT 2 OF 4 | DRAWING NUMBER 200264 H

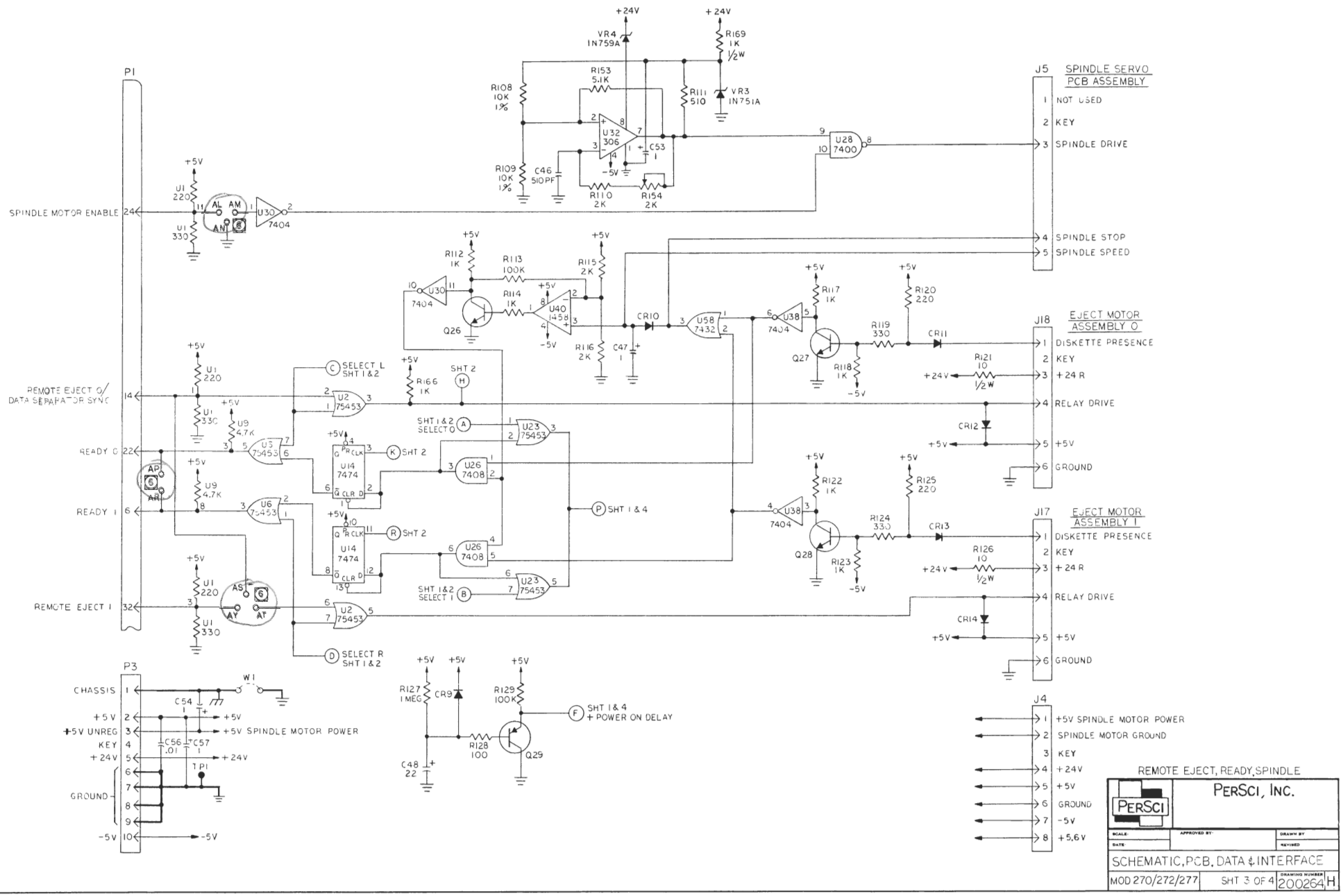
P1
SPINDLE MOTOR ENABLE 24
REMOTE EJECT 0/ DATA SEPARATOR SYNC 14
READY 0 22
READY 1 6
REMOTE EJECT 1 32
+24V
VR4 IN759A
R169 1K ½W
VR3 IN751A
R153 5.1K
R108 10K 1%
R109 10K 1%
R111 510
R110 2K
R154 2K
C46 510PF
C53 1
U32 306
U28 7400
J5 SPINDLE SERVO PCB ASSEMBLY
1 NOT USED
2 KEY
3 SPINDLE DRIVE
4 SPINDLE STOP
5 SPINDLE SPEED
U1 220
U1 330
U30 7404
R112 1K
R113 100K
R114 1K
R115 2K
R116 2K
C47 1
Q26
U40 1458
CR10
U58 7432
R117 1K
R118 1K
R119 330
R120 220
Q27
U38 7404
CR11
R121 10 ½W
J18 EJECT MOTOR ASSEMBLY 0
1 DISKETTE PRESENCE
2 KEY
3 +24 R
4 RELAY DRIVE
5 +5V
6 GROUND
CR12
U9 4.7K
U5 75453
U6 75453
U2 75453
U14 7474
U26 7408
U23 75453
R166 1K
SHT 2
SELECT L SHT 1&2
SELECT R SHT 1&2
SHT 1&2 SELECT 0
SHT 1&2 SELECT 1
SHT 1 & 4
R122 1K
R123 1K
R124 330
R125 220
Q28
CR13
R126 10 ½W
J17 EJECT MOTOR ASSEMBLY 1
CR14
P3
CHASSIS 1
+5V 2
+5V UNREG 3
KEY 4
+24V 5
GROUND 6 7 8 9
-5V 10
W1
C54 1
C56 .01
C57 1
TP1
+5V SPINDLE MOTOR POWER
R127 1 MEG
CR9
R128 100
R129 100K
C48 22
Q29
SHT 1 & 4 + POWER ON DELAY
J4
1 +5V SPINDLE MOTOR POWER
2 SPINDLE MOTOR GROUND
3 KEY
4 +24V
5 +5V
6 GROUND
7 -5V
8 +5.6V
REMOTE EJECT, READY, SPINDLE
PERSCI, INC.
SCALE:
APPROVED BY:
DRAWN BY
DATE
REVISED
SCHEMATIC, PCB, DATA & INTERFACE
MOD 270/272/277
SHT 3 OF 4
DRAWING NUMBER 200264 H

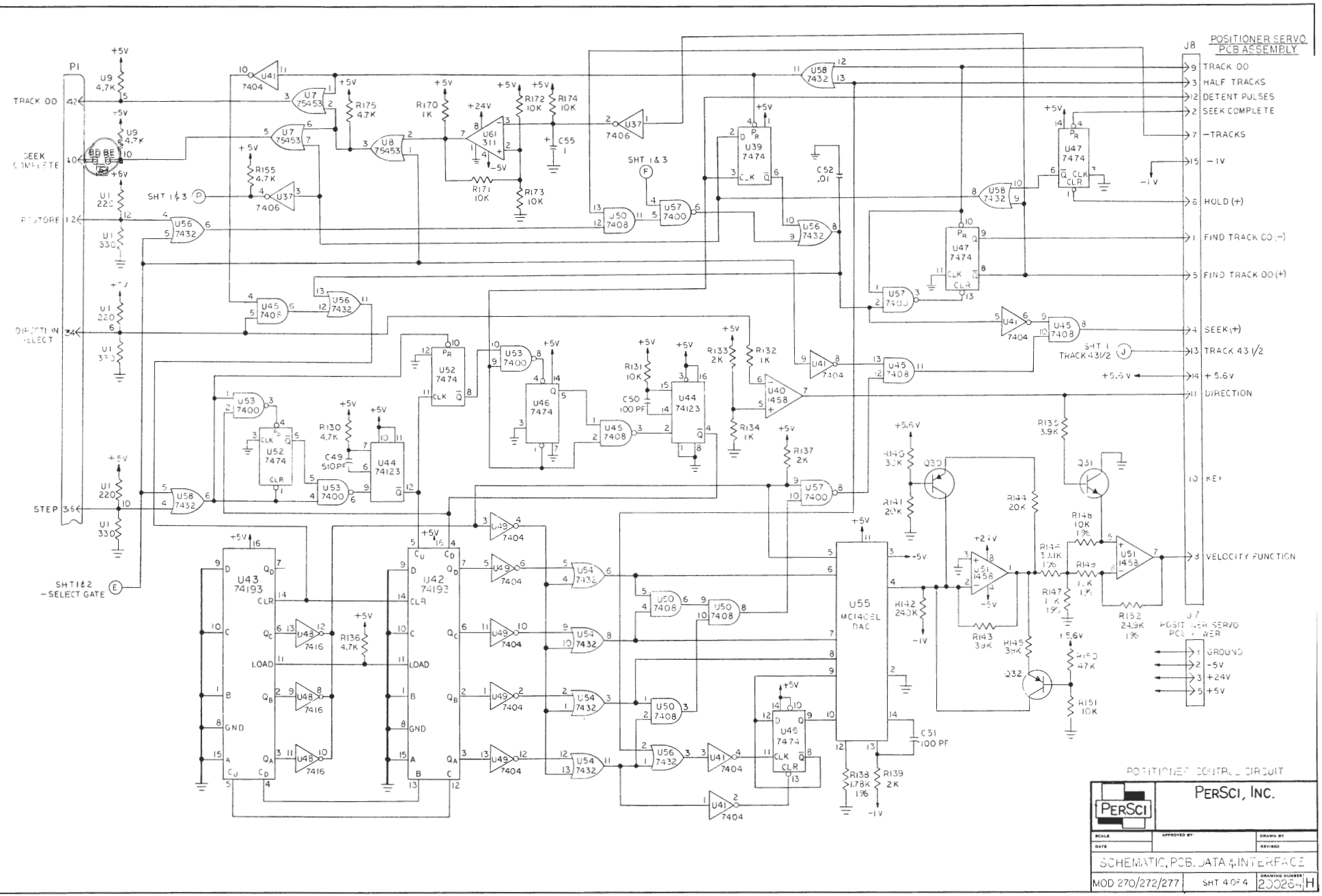
POSITIONER SERVO PCB ASSEMBLY
J8
TRACK 00
HALF TRACKS
DETENT PULSES
SEEK COMPLETE
-TRACKS
-1V
HOLD (+)
FIND TRACK 00 (-)
FIND TRACK 00 (+)
SEEK (+)
TRACK 43 1/2
+5.6V
DIRECTION
KEY
VELOCITY FUNCTION
J7
GROUND
-5V
+24V
+5V
P1
TRACK 00
SEEK COMPLETE
RESTORE
DIRECTION SELECT
STEP
SHT 1&2 -SELECT GATE
SHT 1&3
SHT 1 TRACK 43 1/2
U55 MC1408L DAC
U43 74193
U42 74193
U61 311
U40 1458
U51 1458
Q30
Q31
Q32
POSITIONER CONTROL CIRCUIT
PERSCI, INC.
SCHEMATIC, PCB, DATA & INTERFACE
MOD 270/272/277
SHT 4 OF 4
DRAWING NUMBER 200264
H

REVISIONS		200096	D
REV	DESCRIPTIONS	CHK	DATE	APP R
A	ENGIN REL			
B	ADD R18,19 & 20			
C	ECO 63 MFG REL			
D	SEE ECO 77			

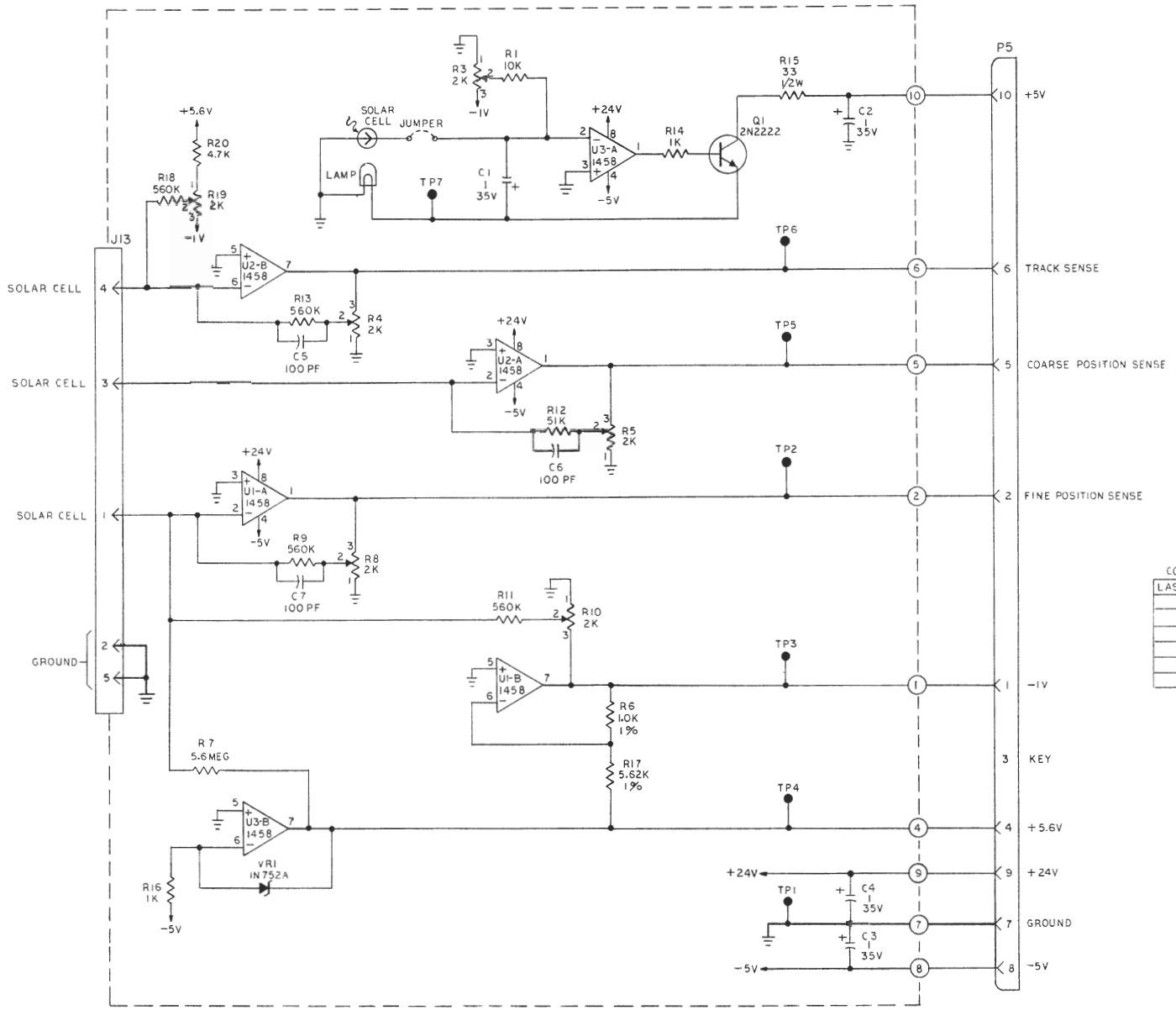

COMP REF. DESIGNATIONS	
LAST USED	DELETED
U3	
Q1	
CR1	
C7	
R20	R2
TP7	

2 ALL CAPACITOR VALUES IN MICROFARADS.
1 ALL RESISTOR VALUES IN OHMS, 1/4W., 5%.
UNLESS OTHERWISE SPECIFIED:

PERSCI, INC.

SCALE	APPROVED BY	DRAWN BY
DATE:		REVISED

SCHEMATIC, PCB, LAMP AMPLIFIER

MOD 270/272/277 SHT 1 OF 1 DRAWING NUMBER 200096 D

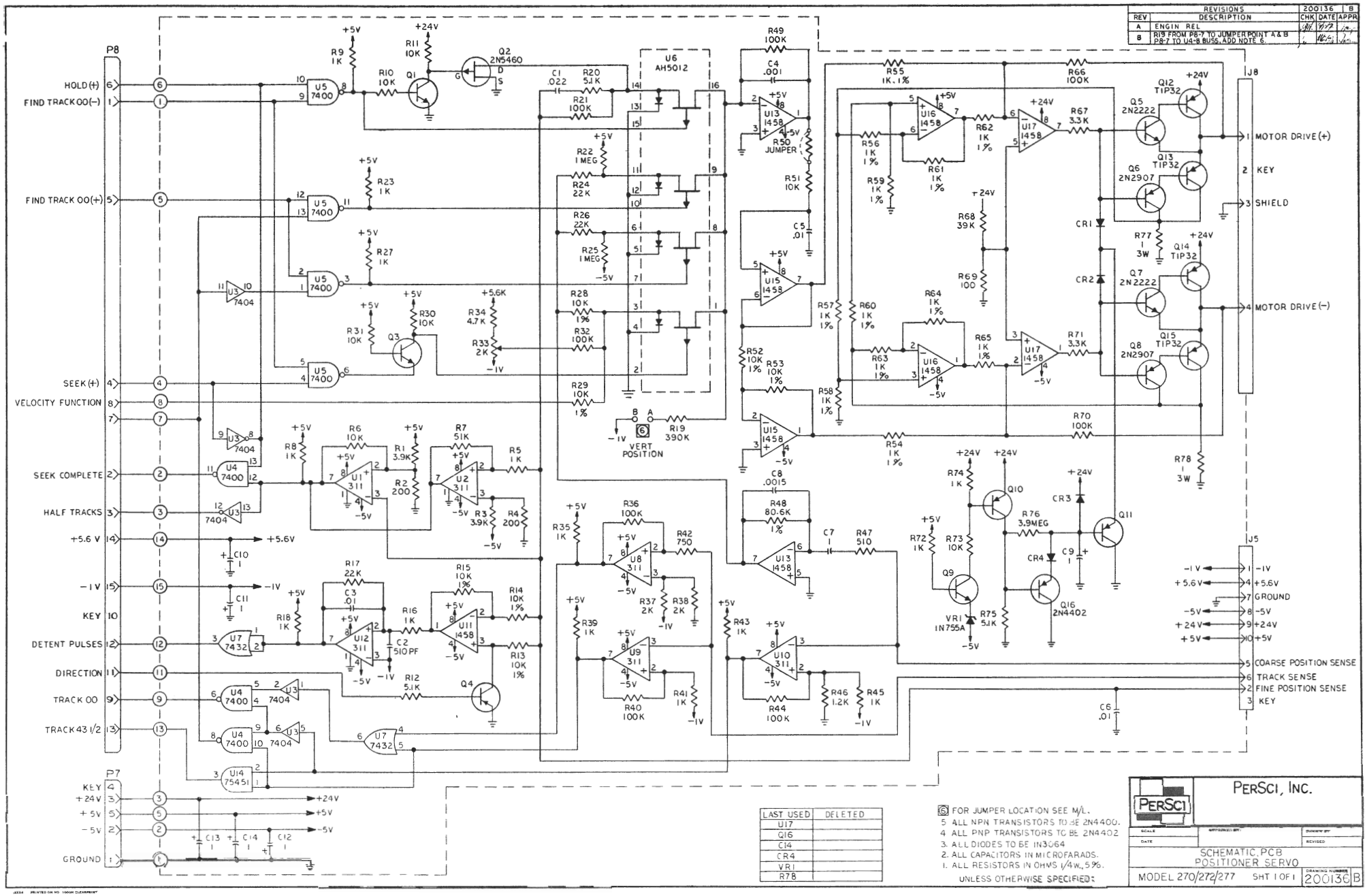
REVISIONS
200136 B
REV DESCRIPTION CHK DATE APPR
A ENGIN REL
B R19 FROM P8-7 TO JUMPER POINT A & B
P8-7 TO U4-8 BUSS, ADD NOTE 6.
P8
HOLD (+)
FIND TRACK 00 (-)
FIND TRACK 00 (+)
SEEK (+)
VELOCITY FUNCTION
SEEK COMPLETE
HALF TRACKS
+5.6 V
-1 V
KEY
DETENT PULSES
DIRECTION
TRACK 00
TRACK 43 1/2
P7
KEY
+24 V
+5 V
-5 V
GROUND
U6 AH5012
VERT POSITION
R19 390K
R50 JUMPER
MOTOR DRIVE (+)
KEY
SHIELD
MOTOR DRIVE (-)
J8
J5
-1 V
+5.6 V
GROUND
-5 V
+24 V
+5 V
COARSE POSITION SENSE
TRACK SENSE
FINE POSITION SENSE
KEY
LAST USED DELETED
U17
Q16
C14
CR4
VR1
R78
6 FOR JUMPER LOCATION SEE M/L.
5 ALL NPN TRANSISTORS TO BE 2N4400.
4 ALL PNP TRANSISTORS TO BE 2N4402
3. ALL DIODES TO BE IN3064
2. ALL CAPACITORS IN MICROFARADS.
1. ALL RESISTORS IN OHMS 1/4W., 5%.
UNLESS OTHERWISE SPECIFIED:
PERSCI, INC.
SCHEMATIC, PCB
POSITIONER SERVO
MODEL 270/272/277 SHT 1 OF 1
200136 B

REVISIONS		200133		E
REV	DESCRIPTION	CHK	DATE	APPR
A	ENGIN REL	[illegible]	[illegible]	
B	I.C. PIN NO. CHG. DUE TO ARTWORK REDESIGN ONLY. NEW PIN DESIG ON U1, U4, U5 & U7. USE WITH PROC BD 'C' AND UP	[illegible]	[illegible]	[illegible]
C	ECO 28	[illegible]	[illegible]	[illegible]
D	ECO 47	[illegible]	[illegible]	[illegible]
E	ECO 53	[illegible]	[illegible]	[illegible]

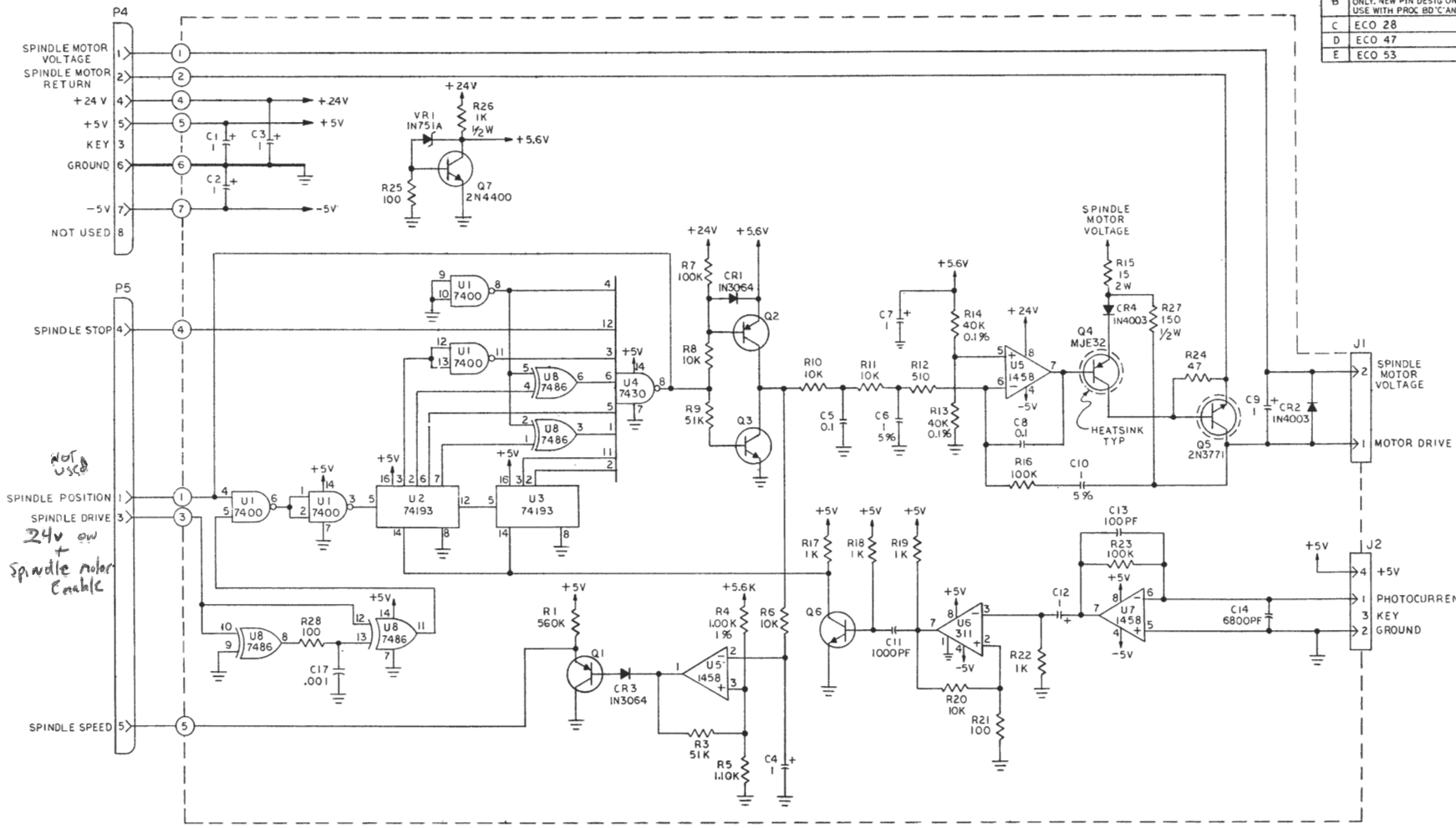

REF DESIGNATIONS

LAST USED	DELETED
U8	
Q7	
CR4	
C17	C15, C16
R28	R2
VR1	

4 ALL PNP TRANSISTORS TO BE 2N4402.
3 ALL NPN TRANSISTORS TO BE 2N4400.
2 ALL CAPACITOR VALUES IN MICROFARADS.
1. ALL RESISTOR VALUES IN OHMS, 1/4W., 5%.
UNLESS OTHERWISE SPECIFIED;

PERSCI, INC.

SCALE: | APPROVED BY: | DRAWN BY
DATE: | REVISED

SCHEMATIC, PCB, SPINDLE SERVO

MOD 270/272/277 | SHT 1 OF 1 | DRAWING NUMBER 200133 E

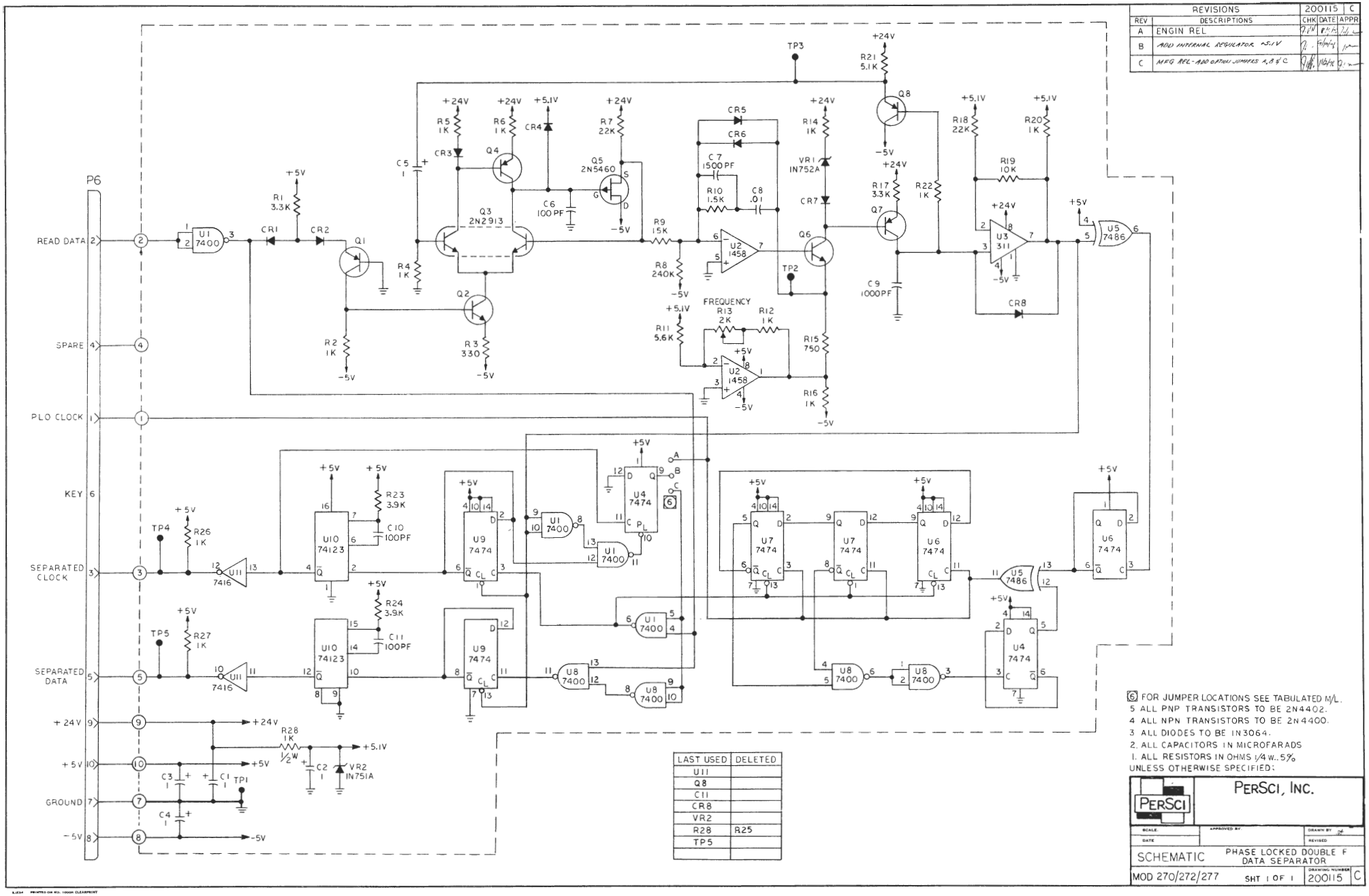

REVISIONS		200115	C
REV	DESCRIPTIONS	CHK	DATE	APPR
A	ENGIN REL			
B	ADD INTERNAL REGULATOR +5.1V			
C	MFG REL-ADD OPTION JUMPERS A,B & C			

LAST USED	DELETED
U11	
Q8	
C11	
CR8	
VR2	
R28	R25
TP5	

6 FOR JUMPER LOCATIONS SEE TABULATED M/L.
5 ALL PNP TRANSISTORS TO BE 2N4402.
4 ALL NPN TRANSISTORS TO BE 2N4400.
3 ALL DIODES TO BE IN3064.
2. ALL CAPACITORS IN MICROFARADS
1. ALL RESISTORS IN OHMS 1/4 W., 5%
UNLESS OTHERWISE SPECIFIED:

PERSCI, INC.

SCALE | APPROVED BY | DRAWN BY
DATE | | REVISED

SCHEMATIC
PHASE LOCKED DOUBLE F DATA SEPARATOR

MOD 270/272/277 SHT 1 OF 1 | DRAWING NUMBER 200115 C

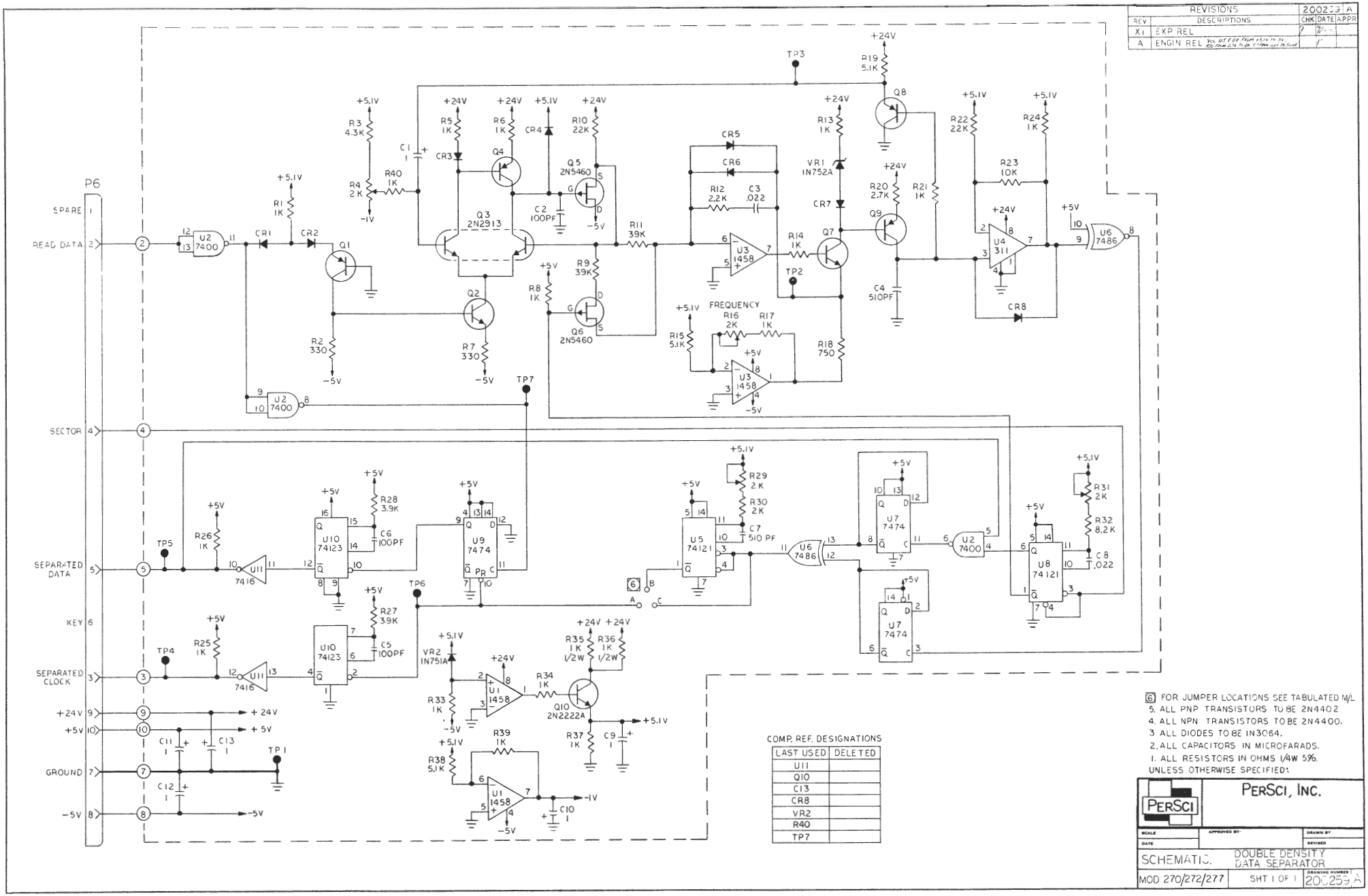
P6
SPARE 1
READ DATA 2
SECTOR 4
SEPARATED DATA 5
KEY 6
SEPARATED CLOCK 3
+24V 9
+5V 10
GROUND 7
-5V 8
TP1
TP2
TP3
TP4
TP5
TP6
TP7
U1 1458
U2 7400
U3 1458
U4 311
U5 74121
U6 7486
U7 7474
U8 74121
U9 7474
U10 74123
U11 7416
Q1
Q2
Q3 2N2913
Q4
Q5 2N5460
Q6 2N5460
Q7
Q8
Q9
Q10 2N2222A
CR1
CR2
CR3
CR4
CR5
CR6
CR7
CR8
VR1 IN752A
VR2 IN751A
FREQUENCY
R1 1K
R2 330
R3 4.3K
R4 2K
R5 1K
R6 1K
R7 330
R8 1K
R9 39K
R10 22K
R11 39K
R12 2.2K
R13 1K
R14 1K
R15 5.1K
R16 2K
R17 1K
R18 750
R19 5.1K
R20 2.7K
R21 1K
R22 22K
R23 10K
R24 1K
R25 1K
R26 1K
R27 3.9K
R28 3.9K
R29 2K
R30 2K
R31 2K
R32 8.2K
R33 1K
R34 1K
R35 1K 1/2W
R36 1K 1/2W
R37 1K
R38 5.1K
R39 1K
R40 1K
C1 1
C2 100PF
C3 .022
C4 510PF
C5 100PF
C6 100PF
C7 510 PF
C8 .022
C9 1
C10 1
C11 1
C12 1
C13 1
+5.1V
+5V
+24V
-1V
-5V
COMP. REF. DESIGNATIONS
LAST USED
DELETED
U11
Q10
C13
CR8
VR2
R40
TP7
REVISIONS
REV
DESCRIPTIONS
CHK
DATE
APPR
X1 EXP REL
A ENGIN REL
6 FOR JUMPER LOCATIONS SEE TABULATED M/L
5. ALL PNP TRANSISTORS TO BE 2N4402
4. ALL NPN TRANSISTORS TO BE 2N4400.
3. ALL DIODES TO BE IN3064.
2. ALL CAPACITORS IN MICROFARADS.
1. ALL RESISTORS IN OHMS 1/4W 5%.
UNLESS OTHERWISE SPECIFIED:
PERSCI, INC.
SCHEMATIC. DOUBLE DENSITY DATA SEPARATOR
MOD 270/272/277
SHT 1 OF 1
DRAWING NUMBER 20025-A

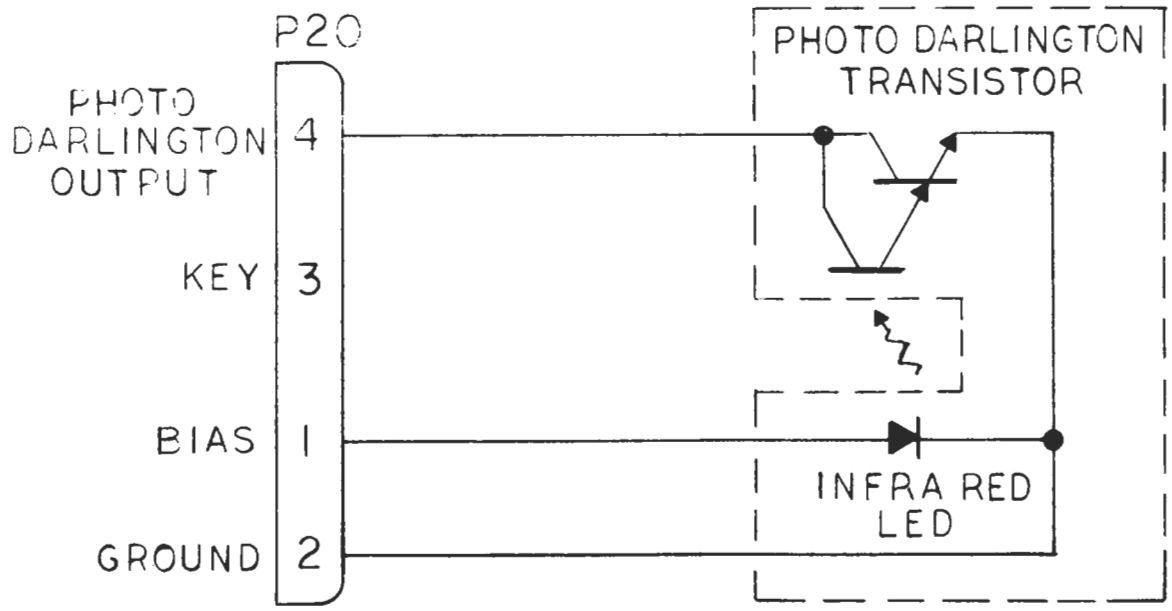

PERSCI, INC.

SCHEMATIC
WRITE PROTECT MODULE
SIDE 0

270/272/277	SHT 1 OF 1	200231	A

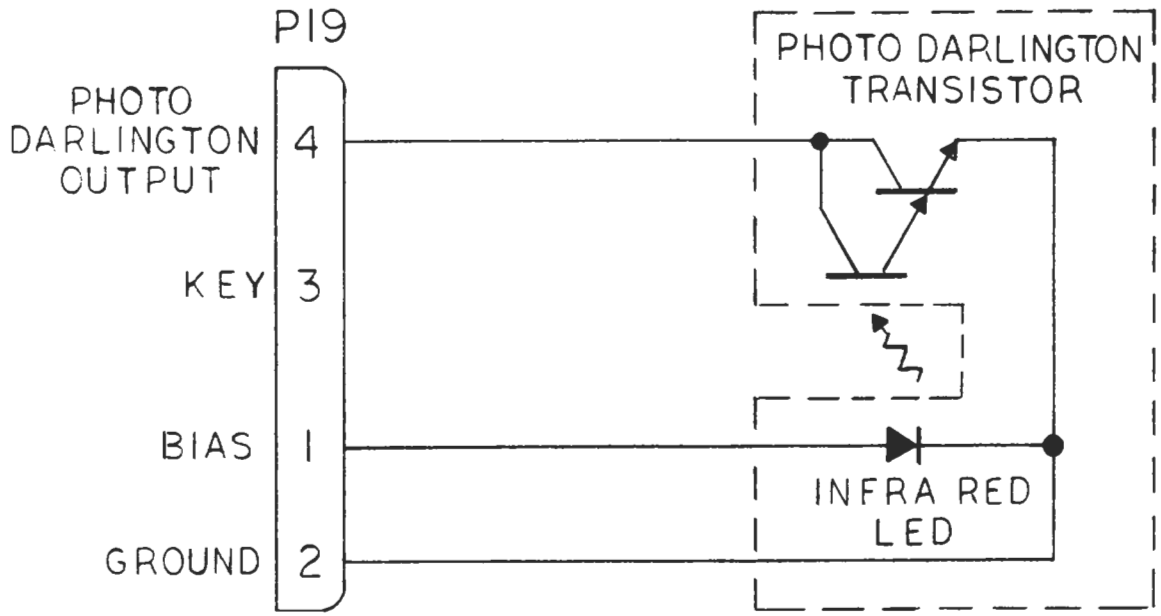

PERSCI, INC.

SCHEMATIC
WRITE PROTECT MODULE
SIDE 1

270/272/277	SHT 1 OF 1	200232	A

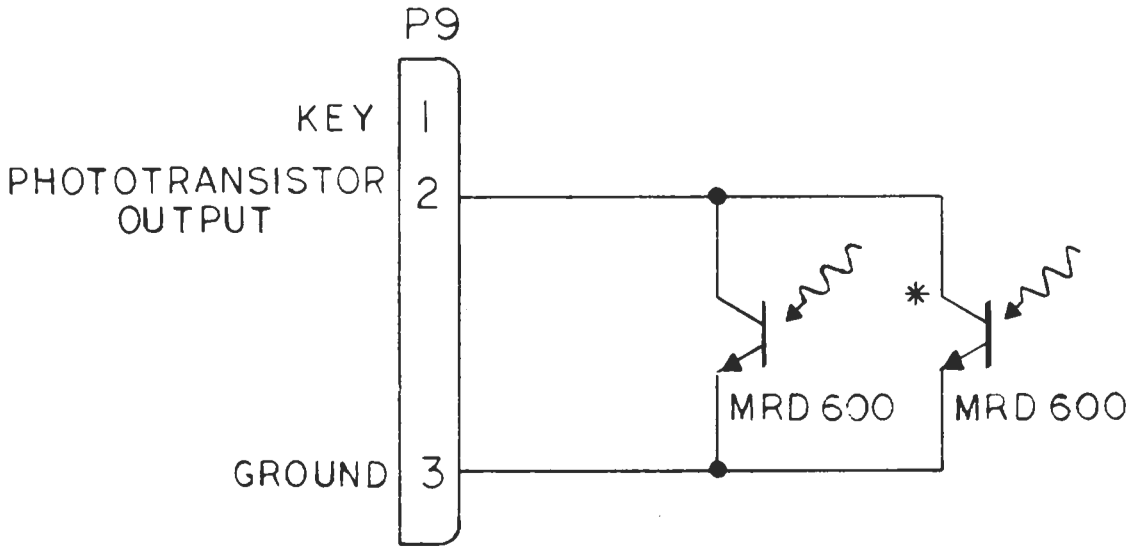

NOTE
SECOND PHOTOTRANSISTOR OPTIONAL FOR DUAL INDEX OPTION.

PERSCI, INC.

SCHEMATIC
PHOTOTRANSISTOR ASSEMBLY
SIDE 0

270/272/277	SHT 1 OF 1	200233	A

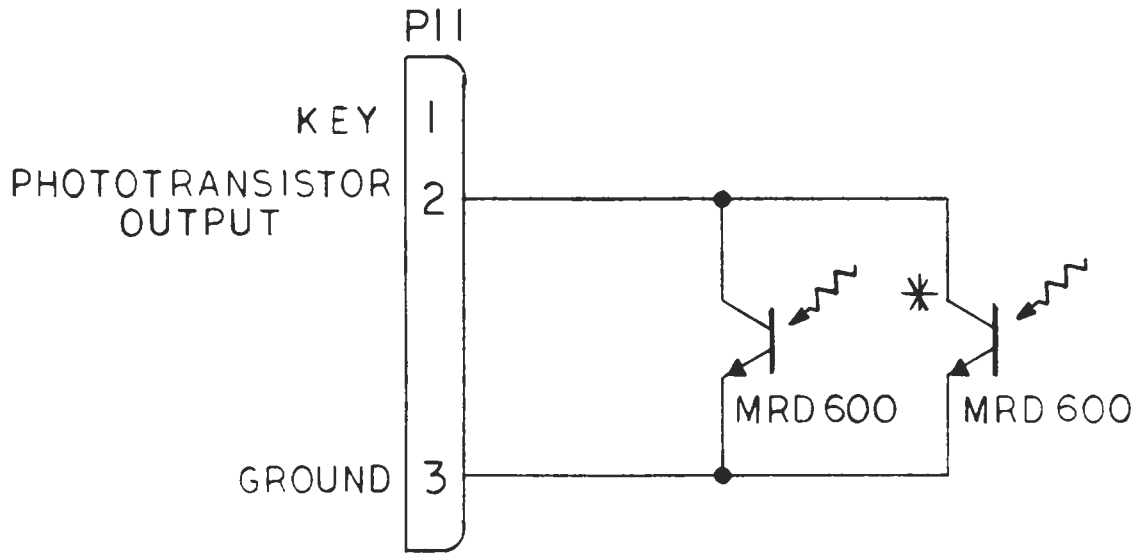

*NOTE
SECOND PHOTOTRANSISTOR OPTIONAL FOR DUAL INDEX OPTION.

PERSCI, INC.

SCHEMATIC
PHOTOTRANSISTOR ASSEMBLY
SIDE 1

270/272/277	SHT 1 OF 1	200234	A

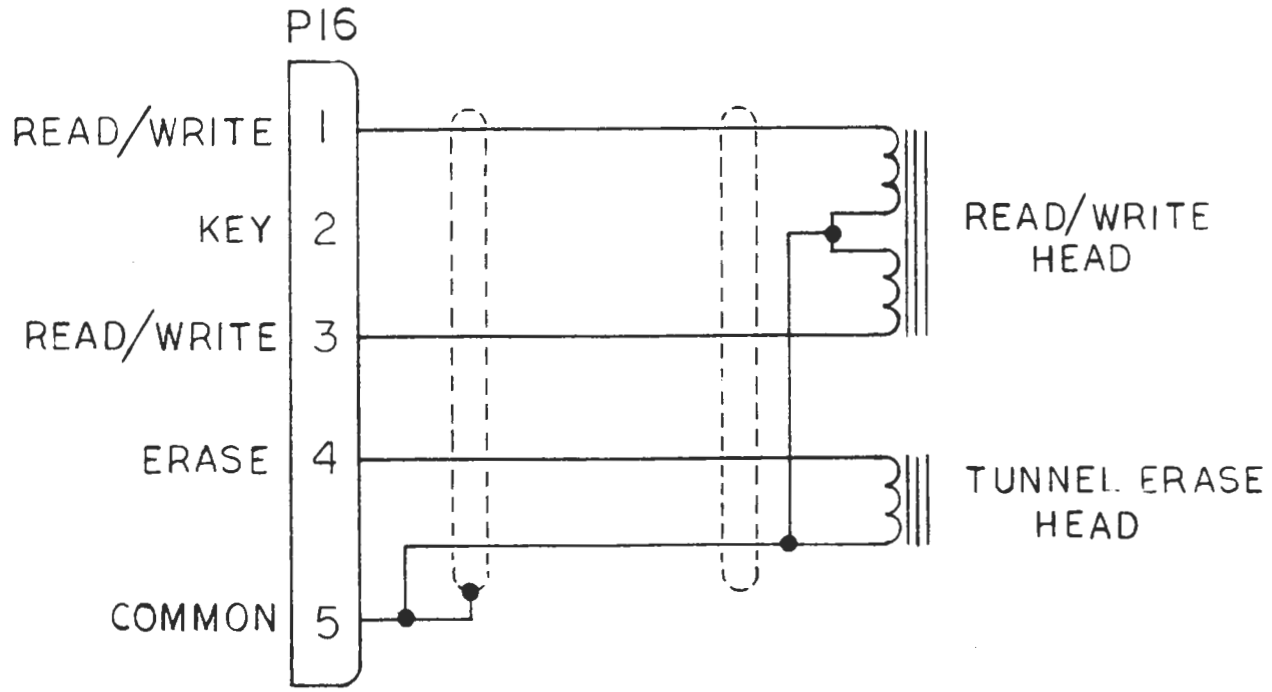

PERSCI, INC.

SCHEMATIC
READ/WRITE HEAD ASSEMBLY
SIDE 0

270/272/277	SHT 1 OF 1	200235	A

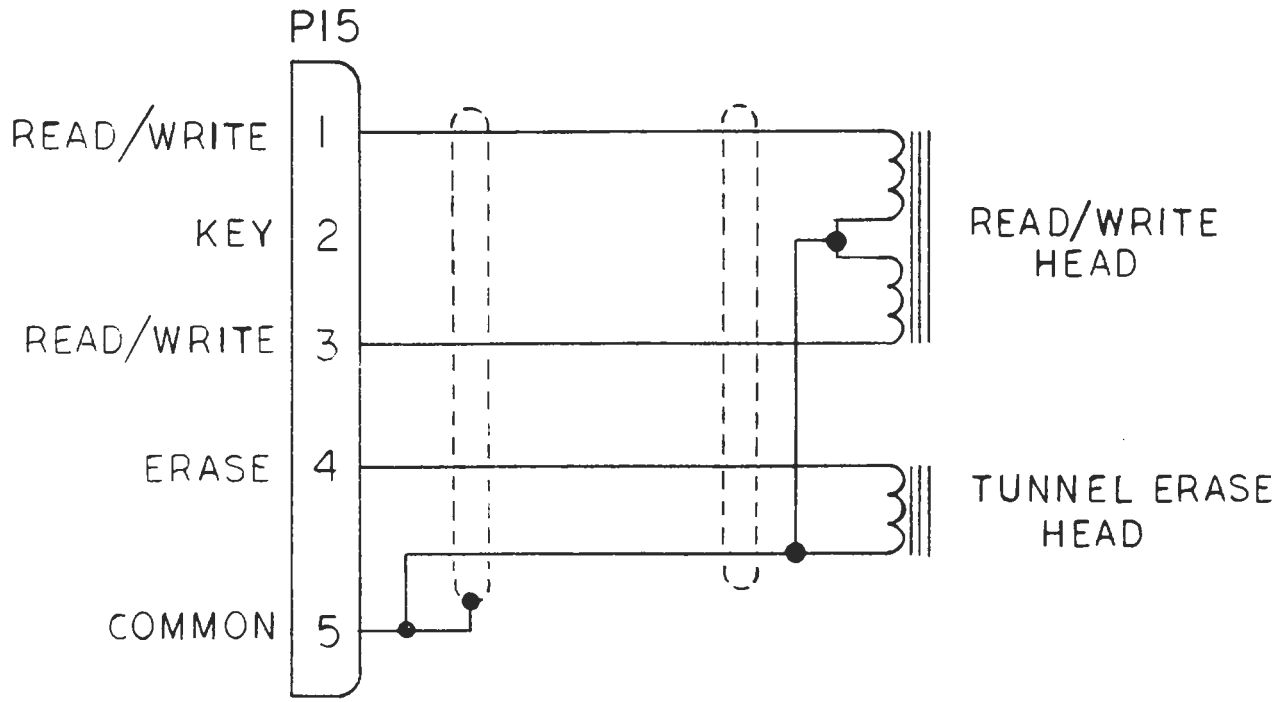

PERSCI, INC.

SCHEMATIC
READ/WRITE HEAD ASSEMBLY
SIDE 1

270/272/277	SHT 1 OF 1	200236	A

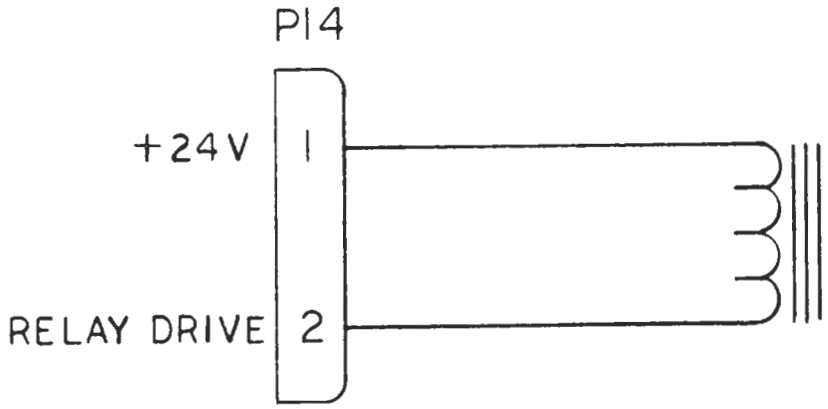

PERSCI, INC.

SCHEMATIC
HEAD LOAD ASSEMBLY
SIDE 0

270/272/277	SHT 1 OF 1	200237	A

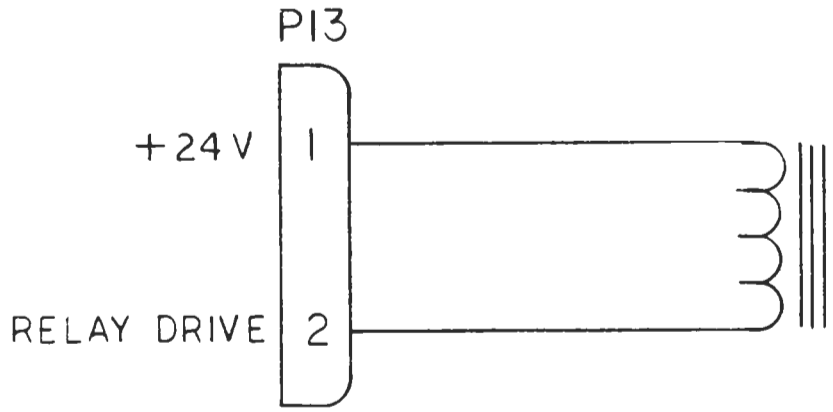

PERSCI, INC.

SCHEMATIC
HEAD LOAD ASSEMBLY
SIDE 1

270/272/277	SHT 1 OF 1	200238	A

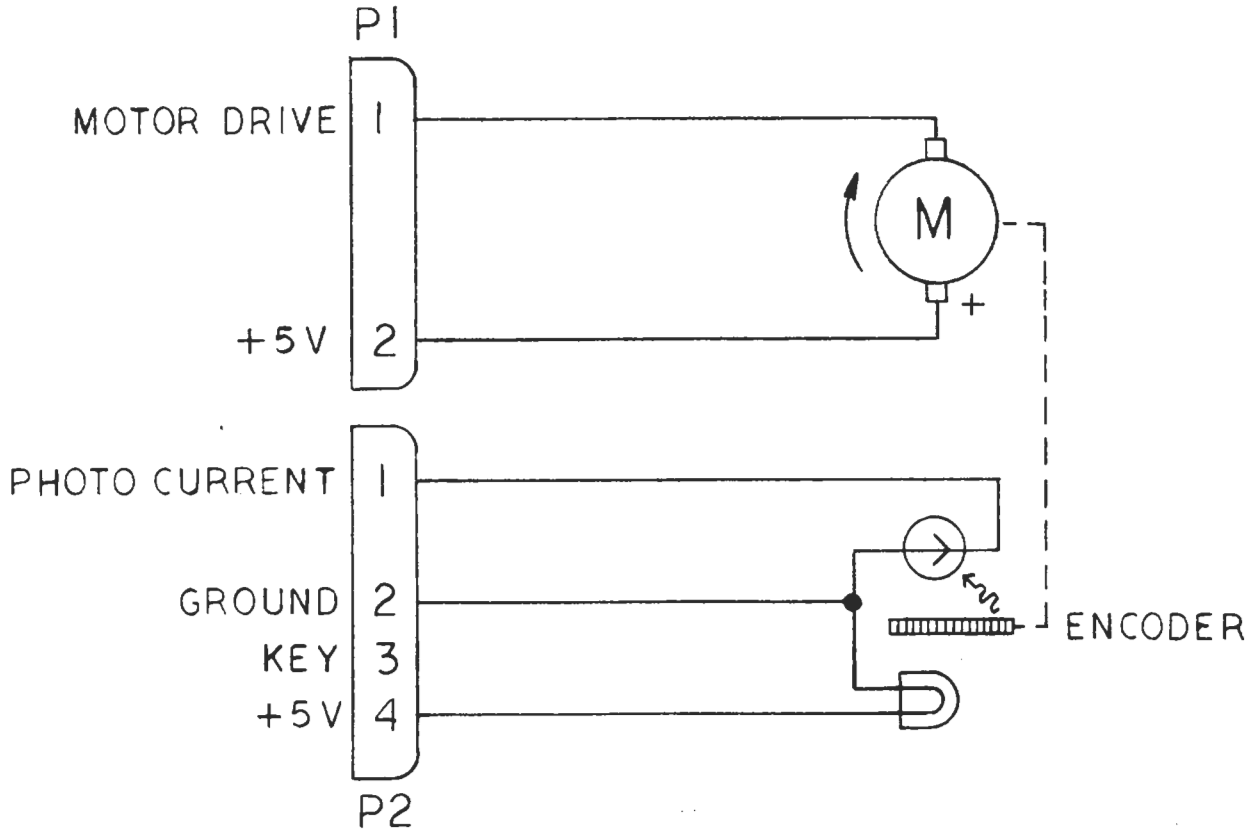

PERSCI, INC.

SCHEMATIC
SPINDLE MOTOR ASSEMBLY

270/272/277	SHT 1 OF 1	200239	A

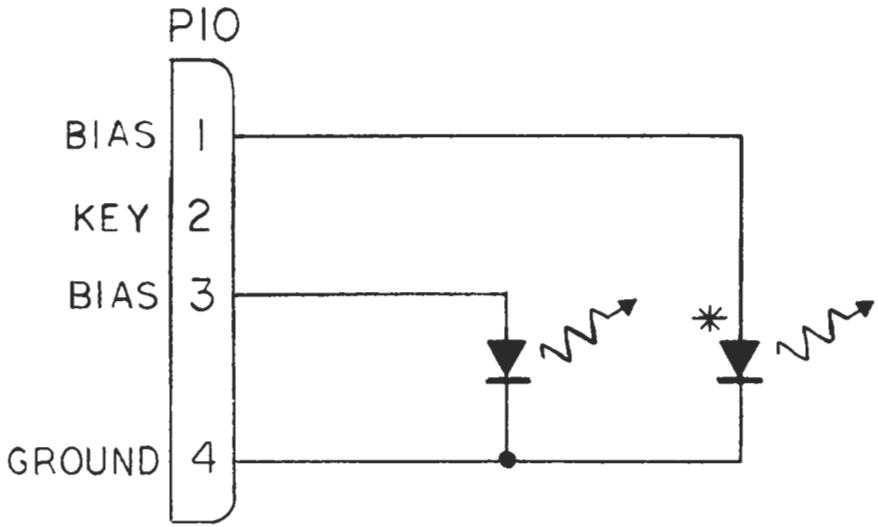

*NOTE;
SECOND LED OPTIONAL FOR
DUAL INDEX OPTION DRIVE.

PERSCI, INC.

SCHEMATIC
LED ASSEMBLY
SIDE 0

270/272/277	SHT 1 OF 1	200240	A

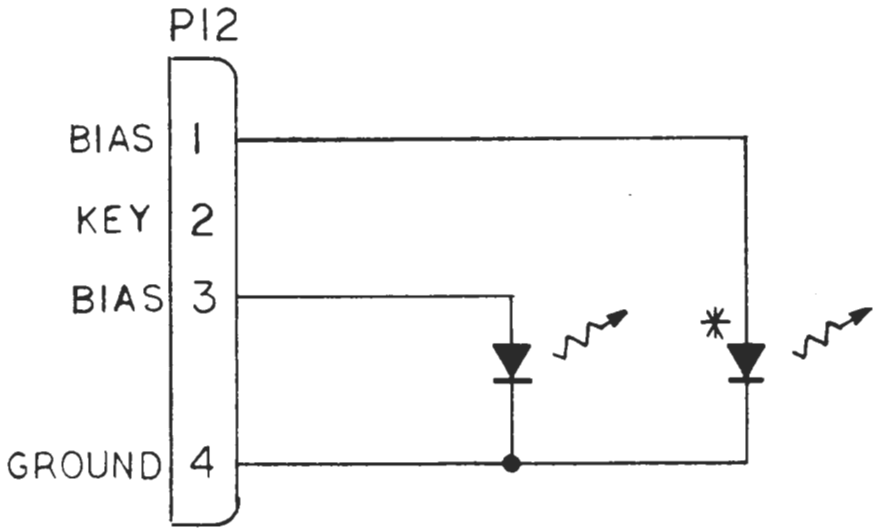

*NOTE
SECOND LED OPTIONAL FOR
DUAL INDEX OPTION DRIVE.

PERSCI, INC.

SCHEMATIC
LED ASSEMBLY
SIDE 1

270/272/277	SHT 1 OF 1	200241	A

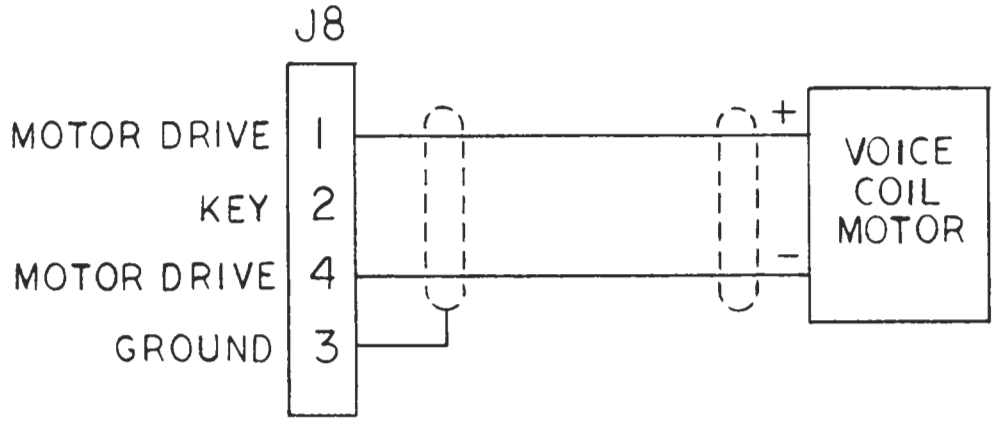

PERSCI, INC.

SCHEMATIC
POSITIONER MOTOR

270/272/277	SHT 1 OF 1	200242	A

REVISIONS			200243	B
REV.	DESCRIPTION	CHK.	DATE	APPROVED
A	MFG RELEASE			
B	ECO 109			

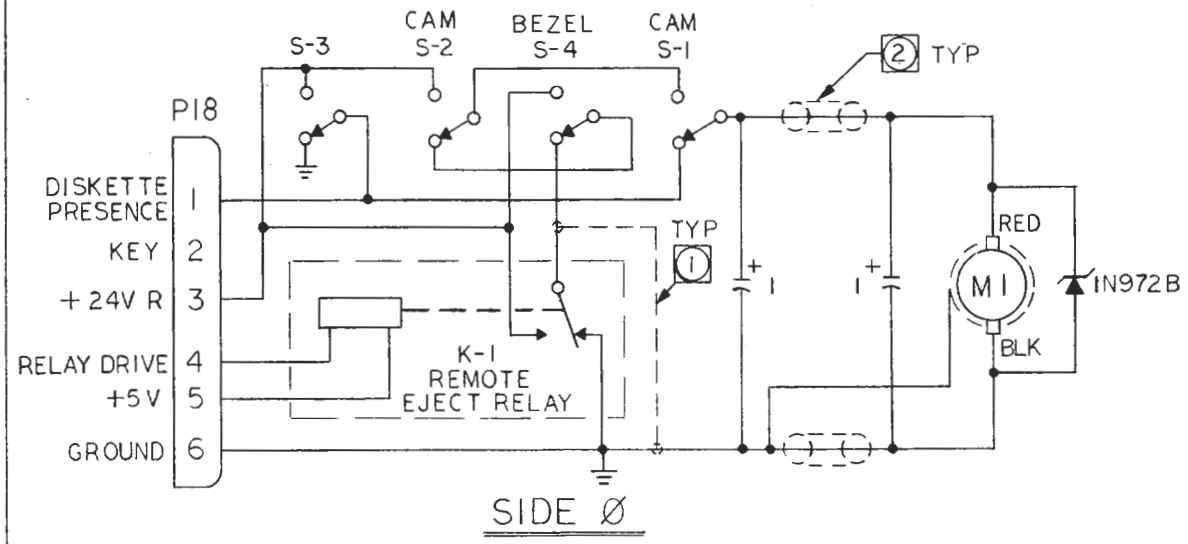

SIDE Ø

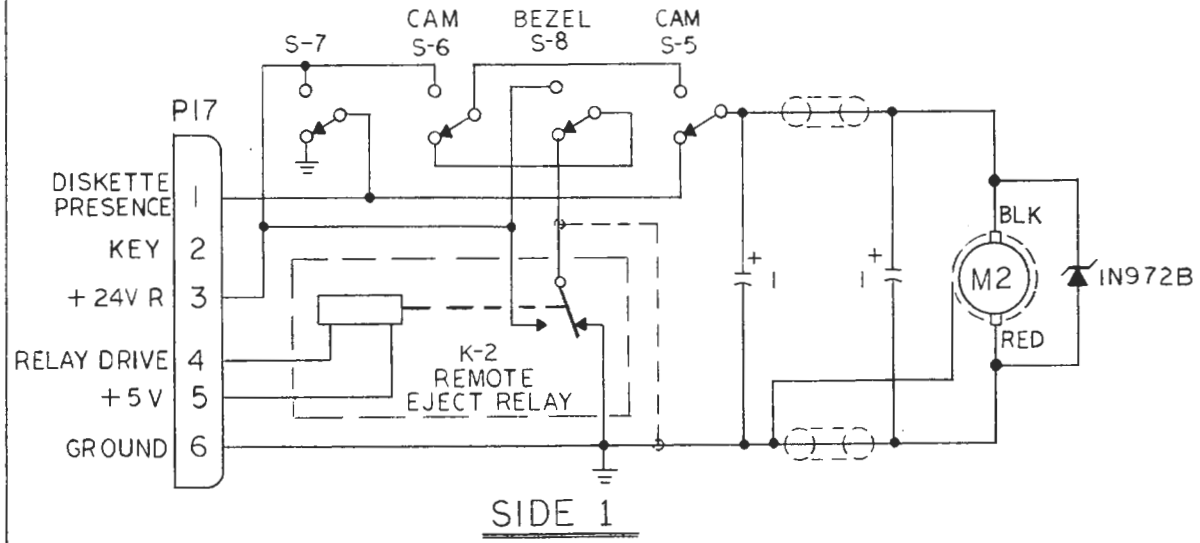

SIDE 1

3 ALL SWITCHES SHOWN NORMALLY CLOSED.

2 FERRITE BEAD PERSCI 100031.

1 OPTIONAL WIRING WITHOUT RELAY.

NOTES;

PERSCI, INC.

SCHEMATIC
EJECT MOTOR ASSEMBLY

270/272/277 SHT 1 OF 1 | 200243 | B

REVISIONS		200080	C
REV	DESCRIPTION	CHK	DATE	APPR
A	ENGIN REL			
B	ADDED R18,19&20			
C	ECO 7			

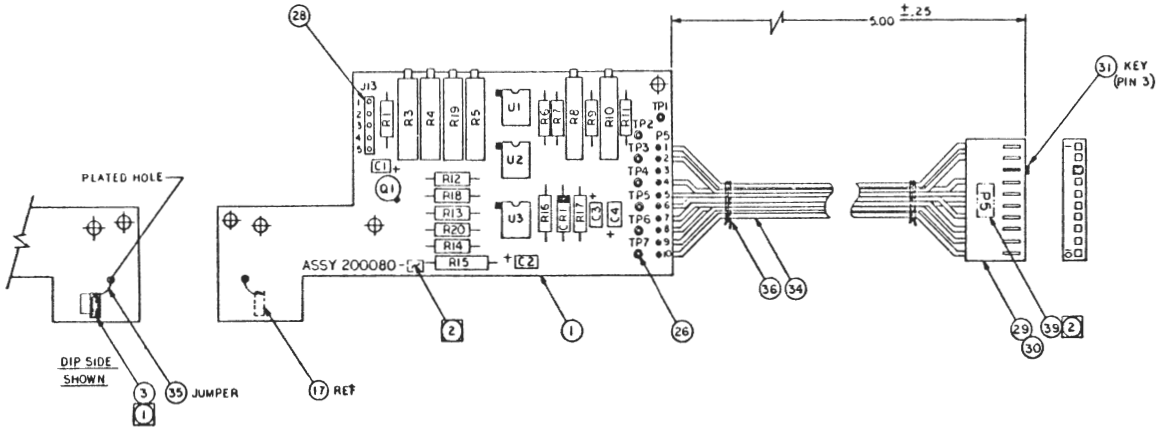

3. SCHEMATIC REF 200096.

[2] MARK REF DESIGNATIONS OR REVISION LEVEL .12 HIGH BLACK/WHITE CHARACTERS IN APPROX AREA SHOWN.

[1] INSTALL PHOTO CELL ON TO TAB LOCATED ON PROCESSED AS SHOWN.

UNLESS OTHERWISE SPECIFIED:

PERSCI, INC.

ASSEMBLY, PCB, LAMP AMPLIFIER

MODEL 270/272 | SCALE 2:1 | SHT 1 OF 3 | 200080 C

REVISIONS		200134	B
REV	DESCRIPTIONS	CHK	DATE	APPR
A	ENGIN REL			
B	REVISED HARNESS-NEW LAYOUT			

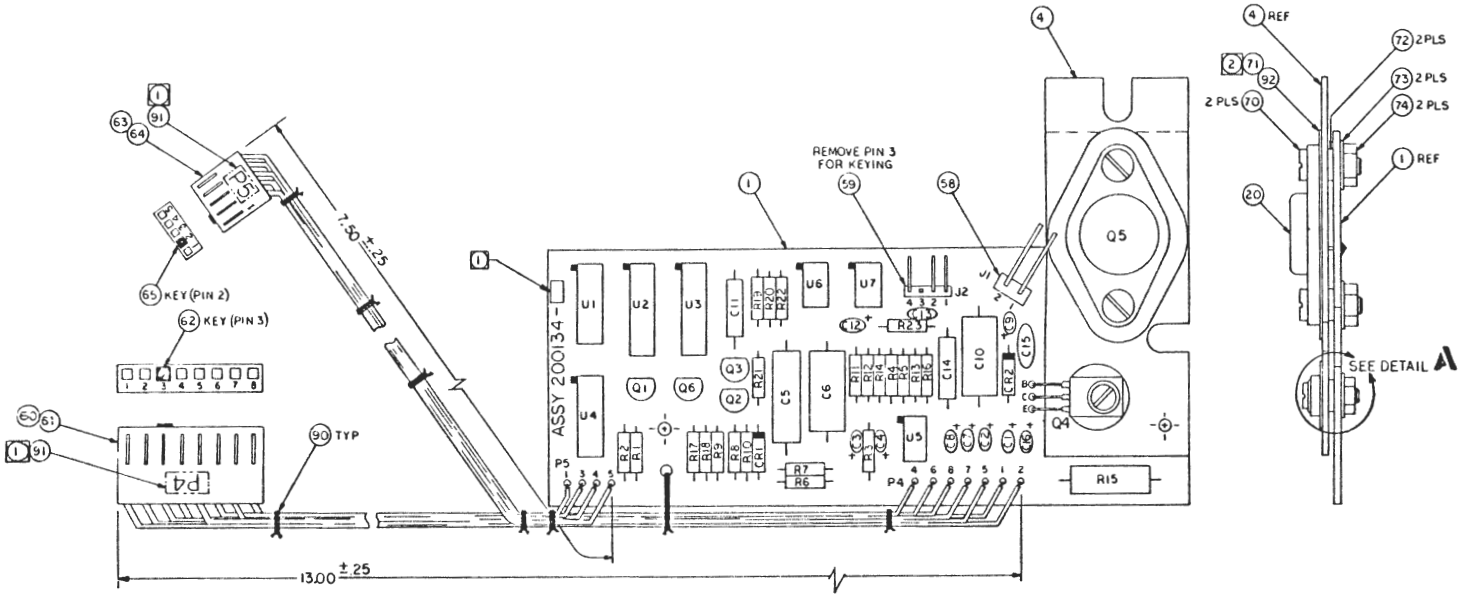

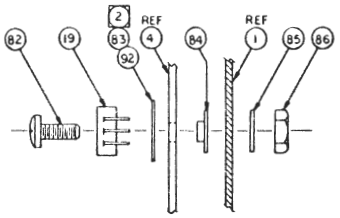

DETAIL A

ITEMS TO BE USED WITH TIP 32 & RCA 32 TYPE TRANSISTORS

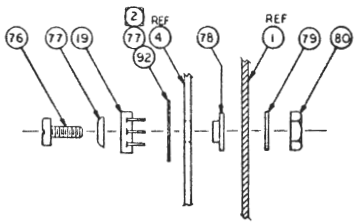

DETAIL A

ITEMS TO BE USED WITH MJE 32 TYPE TRANSISTORS

3. SCHEMATIC REF 200133.

[2] APPLY SILICON GREASE ON BOTH SIDES OF MICA INSULATOR.

[1] MARK REVISION LEVEL .12 HIGH WHITE CHARACTERS IN APPROX AREA SHOWN.

UNLESS OTHERWISE SPECIFIED;

PERSCI, INC.

ASSEMBLY, PCB, SPINDLE SERVO

MODEL 272 | SCALE 2/1 SHT 1 OF 4 | 200134 B

REVISIONS		200137	B1
REV	DESCRIPTIONS		
A	ENGIN REL		
B1	ADDED JUMPER POINT A & B DWG CHG; KEY PIN 3 OF ITEM 79		

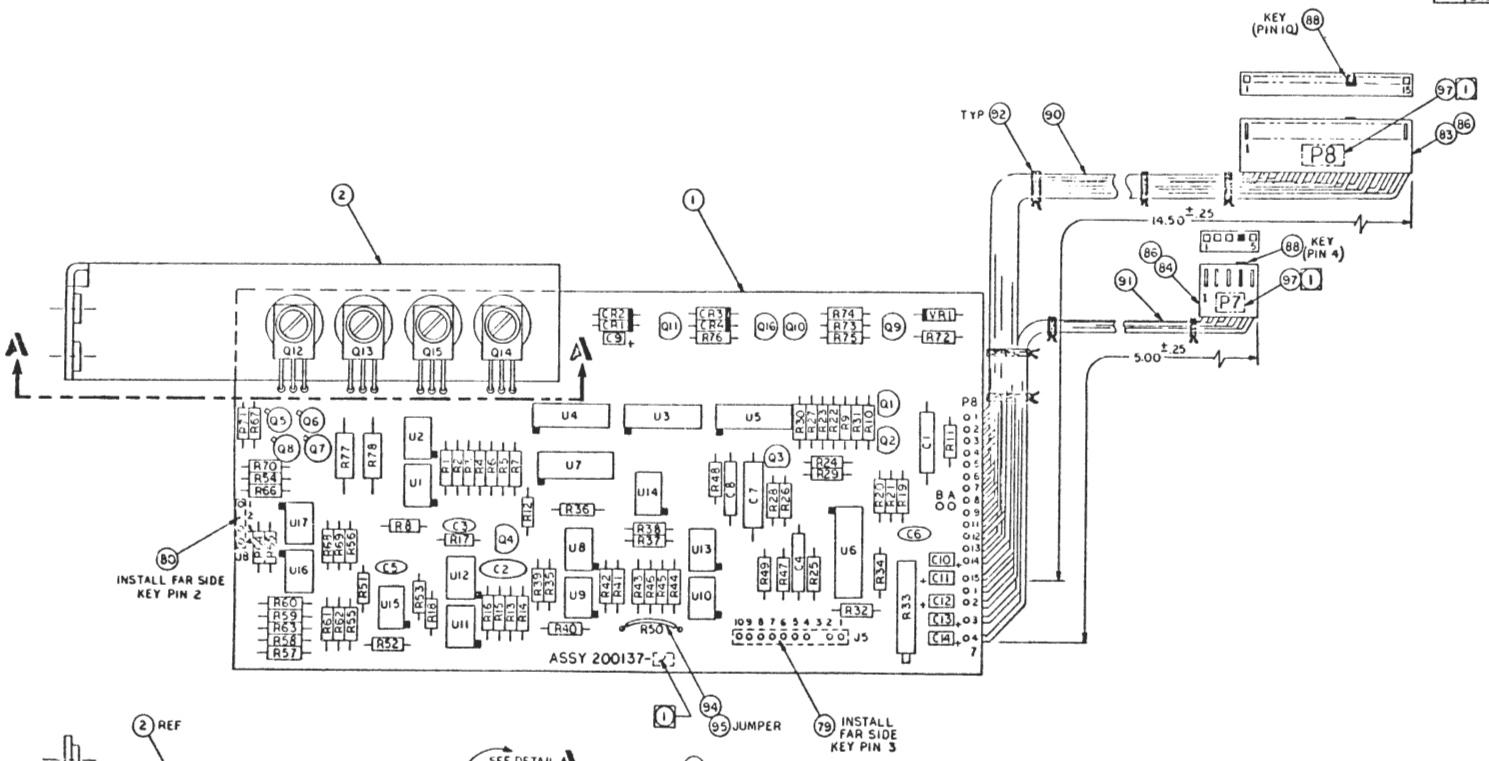

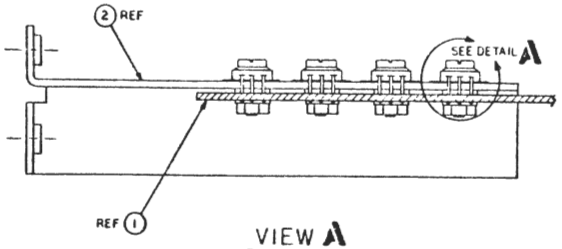

VIEW A

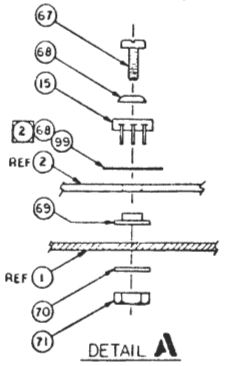

DETAIL A

ITEMS TO BE USED WITH MJE TYPE TRANSISTORS

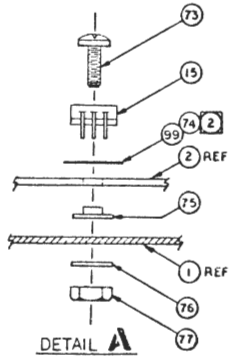

DETAIL A

ITEMS TO BE USED WITH TIP 32 & RCA 32 TYPE TRANSISTORS

3 SCHEMATIC REF 200136.

2 APPLY SILICON GREASE ON BOTH SIDES OF MICA INSULATOR.

1 MARK REF DESIGNATIONS OR REVISION LEVEL .12 HIGH BLACK/WHITE CHARACTERS IN APPROX AREA SHOWN.

UNLESS OTHERWISE SPECIFIED;

PERSCI, INC.

ASSEMBLY, PC B. POSITIONER SERVO

MODEL 272 | SIZE C1 | SHT 1 OF 5 | 200137 B1

REVISIONS		200157		C
REF	DESCRIPTIONS	CHK	DATE	APPR
A	ENGIN REL	[illegible]	[illegible]	[illegible]
B	ADD INTERNAL REGULATOR +5.1V	[illegible]	[illegible]	[illegible]
C	MFG REL. ADD OPTION JUMPERS A,B & C	[illegible]	[illegible]	[illegible]

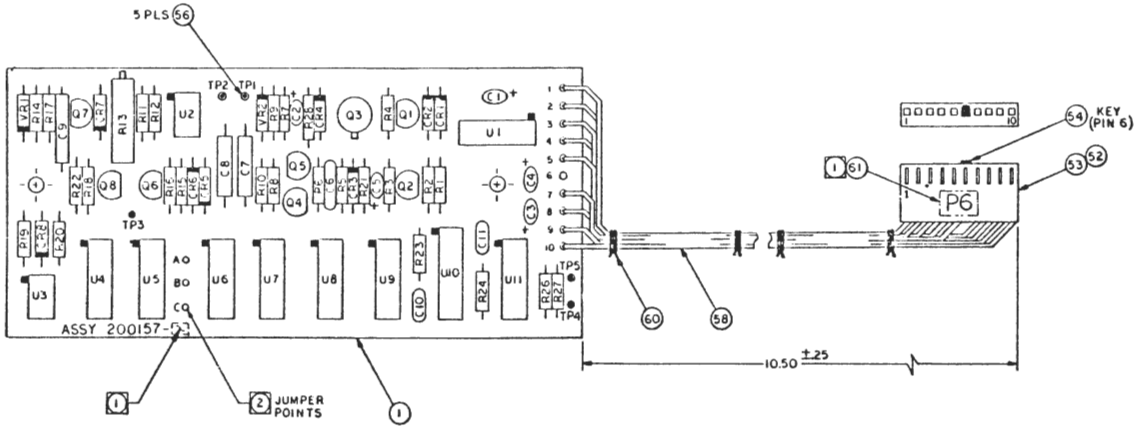

3 SCHEMATIC REF 200115.

2 FOR JUMPER LOCATIONS SEE M/L DASH VERSIONS.

1 MARK REF. DESIGNATIONS OR REVISION LEVEL .12 HIGH BLACK/WHITE CHARACTERS IN APPROX AREA SHOWN.

UNLESS OTHERWISE SPECIFIED:

PERSCI, INC.

ASSY., PCB., PHASED LOCKED DOUBLE F DATA SEPARATOR

MODEL 270/272 | SCALE 2:1 | SHT 1 OF 3 | 200157 C

REV	DESCRIPTIONS	CHK	DATE	APPR
E	ECO #8			

REVISIONS		200263		E
REV	DESCRIPTIONS	CHK	DATE	APPR
X1	EXP REL			
X2	ADD C52&C53 ALSO VALUE CHANGES			
A	MFG REL			
B	ECO 3			
C	ECO 4			
D	ECO 5			

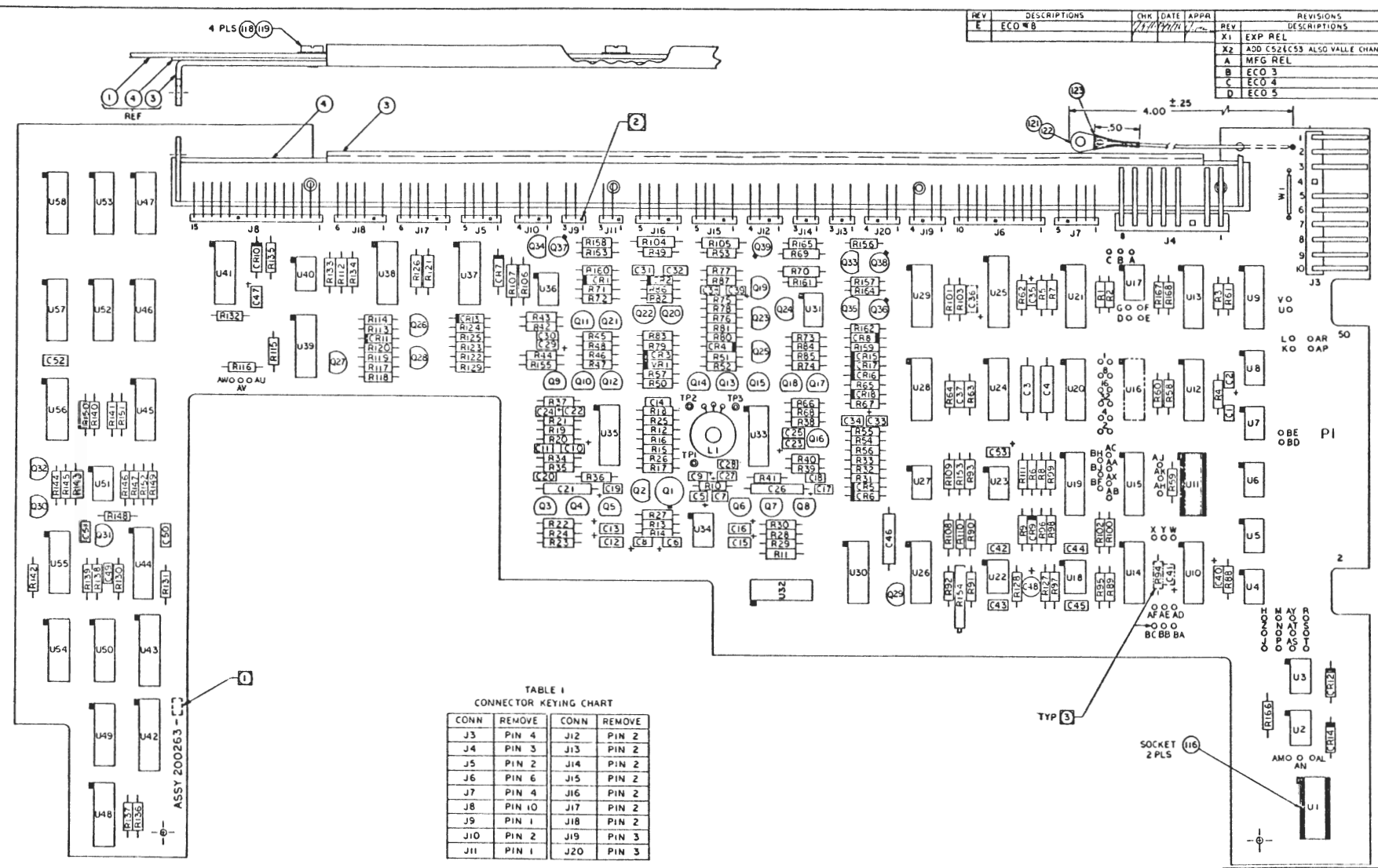

TABLE I
CONNECTOR KEYING CHART

CONN	REMOVE	CONN	REMOVE
J3	PIN 4	J12	PIN 2
J4	PIN 3	J13	PIN 2
J5	PIN 2	J14	PIN 2
J6	PIN 6	J15	PIN 2
J7	PIN 4	J16	PIN 2
J8	PIN 10	J17	PIN 2
J9	PIN 1	J18	PIN 2
J10	PIN 2	J19	PIN 3
J11	PIN 1	J20	PIN 3

4 SCHEMATIC REF 200264
3 FOR VAR. COMP. VALUES AND JUMPER LOCATIONS SEE TABULATED M/L.
2 REMOVE CONNECTOR PINS AS SPECIFIED ON TABLE I, PRIOR TO CONNECTOR INSTALLATION.
1 MARK REVISION LEVEL .12 HIGH WHITE CHARACTERS IN APPROX AREA SHOWN.
UNLESS OTHERWISE SPECIFIED:

PERSCI, INC.

ASSEMBLY, PCB DATA & INTERFACE

MODEL 270 SCALE 2:1 SHT 1 OF 6 200263 E

REV E

DWG NO. 200263-000

MATERIAL LIST

TITLE	DWG NO.	REV	SHEET
ASSEMBLY, PCB DATA AND INTERFACE	200263-000	E	SHEET 2 OF 6
MODEL 270 BASIC BOARD	PERSCI. INC.		

ITEM NO.	DRAWING TITLE		DWG NO.	QTY	REMARKS
1	BOARD, PROCESSED		200262	1	REV B
2					
3	BRACKET, DATA BD		200171	1	REV B
4	INSULATOR, DATA BD		200174	1	REV A
5					
6					
7					
8					
9					
10					
11	IC	LM311N	150600	4	U18, 22, 23, 34
12	IC	MC1406L	150601	1	U55
13	IC	MC1458C-P1	150602	2	U40, 51
14	IC	7400	150603	4	U15, 28, 53, 57
15	IC	7404	150604	5	U20, 32, 38, 41, 49
16	IC	7408	150605	4	U26, 29, 45, 50
17	IC	7432	150608	5	U14, 19, 54, 56, 58
18	IC	7474	150609	6	U24, 30, 39, 46, 47, 52
19	IC	7486	150611	1	U21
20	IC	74123	150612	4	U10, 12, 25, 44
21	IC	74193	150614	2	U42, 43
22	IC	75451	150616	1	U17
23	IC	75452	150617	2	U31, 36
24	IC	75453	150618	8	U2,3,4,5,6,7,8,27
25	IC	72733	150619	2	U33, 35
26	IC	7416	150621	2	U13, 48
27	IC	7406	150622	1	U37
28					
29					
30	RESISTOR NETWORK	4.7K	150050	1	U9
31	RESISTOR NETWORK	220/330	150051	1	U1
32					
33					

MATERIAL LIST

TITLE	DWG NO.	REV	SHEET
ASSEMBLY, PCB DATA AND INTERFACE	200263-000	E	SHEET 3 OF 6
MODEL 270 BASIC BOARD	PERSCI, INC.		

200263-0

ITEM NO.	DRAWING TITLE		DWG NO.	QTY	REMARKS
34	TRANSISTOR	2N4400	150200	5	Q2,26,27,28,31
35	TRANSISTOR	2N4402	150201	25	Q3,4,5,6,7,8,9,10,
					13,16,17,18,19,20,
					21,22,23,24,25,
					29,30,32,33,34,35
36	TRANSISTOR	2N5460	150202	4	Q11,12,14,15
37	TRANSISTOR	2N2913	150203	1	Q1
38	TRANSISTOR	2N706A	150207	4	Q36,37,38,39
39					
40					
41					
42	DIODE	1N3064	150300	18	CR1,2,3,4,5,6,7,8,
					9,10,11,12,13,14,
					15,16,17,18
43	DIODE	1N752A	150302	1	VR1
44					
45					
46	INDUCTOR	200UH	150094	1	L1
47					
48					
49	CAPACITOR, MICA	100pf	150102-101	3	C1,50,51
50	CAPACITOR, MICA	510pf	150102-511	5	C14,42,44,46,49
51	CAPACITOR, MYLAR	.001UF	150101-102	4	C3,4,21,26
52	CAPACITOR, CERAMIC	.01UF	150103-103	16	C7,11,18,20,24,25,
					28,30,31,32,34,37,
					38,43,45,52
53	CAPACITOR, TANTL 10%	0.1UF	150100-104	2	C35,40
54	CAPACITOR, TANTL 10%	1UF	150100-105	20	C2,5,6,8,9,10,12
					13,15,16,17,19, 22,
					23,27,29,33,39,47,
					53

REV E

DWG NO. 200263-000

MATERIAL LIST

TITLE	DWG NO.	REV	SHEET
ASSEMBLY, PCB DATA AND INTERFACE	200263-000	E	SHEET 4 OF 6
MODEL 270 BASIC BOARD	PERSCI, INC.		

ITEM NO.	DRAWING TITLE		DWG NO.	QTY	REMARKS
55	CAPACITOR, TANTL	22UF	150100-226	1	C48
56					
57					
58					
59	RESISTOR, VARIABLE	2K	150003-202	1	R154
60					
61	RESISTOR ½ W., 5%	10	150002-100	2	R121,126
62	RESISTOR ½ W., 5%	47	150002-470	2	R69,70
63	RESISTOR ½ W., 5%	68	150002-680	4	R104,105,106,107
64					
65	RESISTOR, ¼ W., 1%	1.50K	150001-1501	1	R81
66	RESISTOR ¼ W., 1%	332	150001-3320	2	R13,14
67	RESISTOR ¼ W., 1%	1.78K	150001-1781	1	R138
68	RESISTOR ¼ W., 1%	3.01K	150001-3011	1	R78
69	RESISTOR ¼ W., 1%	10K	150001-1002	5	R108,109,147,148,149
70	RESISTOR ¼ W., 1%	24.9K	150001-2492	1	R152
71	RESISTOR ¼ W., 1%	30.1K	150001-3012	1	R146
72	RESISTOR ¼ W., 1%	4.64K	150001-4641	2	R86,87
73					
74	RESISTOR ¼ W., 5%	10	150000-100	14	R3,10,11,12,18,19,
					33,34,37,38,41,
					42,56,77
75	RESISTOR ¼ W., 5%	47	150000-470	2	R26,27
76	RESISTOR ¼ W., 5%	100	150000-101	13	R23,29,35,36,39,
					40,82,83,84,85,
					101,103,128
77	RESISTOR ¼ W., 5%	200	150000-201	1	R111
78	RESISTOR ¼ W., 5%	220	150000-221	7	R5,7,49,53,58,
					120,125
79	RESISTOR ¼ W., 5%	330	150000-331	13	R6,8,9,15,16,17,
					59,65,66,67,68,
					119,124

MATERIAL LIST

TITLE	DWG NO.	REV	SHEET
ASSEMBLY, PCB DATA AND INTERFACE	200263-000	E	5 OF 6
MODEL 270 BASIC BOARD	PERSCI, INC.		

ITEM NO.	DRAWING TITLE		DWG NO.	QTY	REMARKS
80	RESISTOR ¼ W., 5%	430	150000-431	3	R25,91,97
81	RESISTOR ¼ W., 5%	1K	150000-102	21	R1,2,48,52,64,71,
					72,73,74,92,98,112,
					114,117,118,122,
					123, 132, 134,166,
					158
82	RESISTOR ¼ W., 5%	2K	150000-202	10	R22,24,28,30,
					110,115,116,133,
					137,139
83					
84	RESISTOR ¼ W., 5%	3.9K	150000-392	4	R4,45,57,135
85	RESISTOR ¼ W., 5%	4.7K	150000-472	10	R60,61,
					130,136,155,159,
					160,161,167,168
86	RESISTOR ¼ W., 5%	5.1K	150000-512	1	R153
87	RESISTOR ¼ W., 5%	6.8K	150000-682	5	R46,47,50,51,62
88	RESISTOR ¼ W., 5%	10K	150000-103	19	R20,21,31,32,43,44,
					54,55,79,
					89,95,131,151,156,157,
					162,163,164,165
89	RESISTOR ¼ W., 5%	15K	150000-153	2	R100,102
90	RESISTOR ¼ W., 5%	18K	150000-183	1	R63
91	RESISTOR ¼ W., 5%	20K	150000-203	2	R141,144
92	RESISTOR ¼ W., 5%	22K	150000-223	3	R75,76,80
93	RESISTOR ¼ W., 5%	30K	150000-303	3	R93,99,140
94	RESISTOR ¼ W., 5%	36K	150000-363	1	R88
95	RESISTOR ¼ W., 5%	39K	150000-393	2	R143,145
96	RESISTOR ¼ W., 5%	47K	150000-473	3	R90,96,150
97					
98	RESISTOR ¼ W., 5%	100K	150000-104	2	R113,129
99	RESISTOR ¼ W., 5%	240K	150000-244	1	R142
100	RESISTOR ¼ W., 5%	1MEG	150000-105	1	R127

REV E

DWG NO. 200263-000

MATERIAL LIST

TITLE	DWG NO.	REV	SHEET
ASSEMBLY, PCB DATA AND INTERFACE	200263-000	E	SHEET 6 OF 6
MODEL 270 BASIC BOARD	PERSCI, INC.		

ITEM NO.	DRAWING TITLE	DWG NO.	QTY	REMARKS
101				
102				
103				
104				
105				
106				
107	CONNECTOR, ANGLE 3 PIN	100040-003	4	J9,11,13,14
108	CONNECTOR, ANGLE 4 PIN	100040-004	4	J10,12,19,20
109	CONNECTOR, ANGLE 5 PIN	100040-005	4	J5,15,16,7
110	CONNECTOR, ANGLE 6 PIN	100040-006	2	J17,18
111	CONNECTOR, ANGLE 10 PIN	100040-010	1	J6
112	CONNECTOR, ANGLE 15 PIN	100040-015	1	J8
113	CONNECTOR, ANGLE 8 PIN	100042-008	1	J4
114	CONNECTOR, ANGLE 10 PIN	100042-010	1	J3
115	PIN, MALE	100046	3	TP1,2,3
116	SOCKET, IC	150097	2	USE WITH U1 & U11
117				
118	SCREW	100002-203	4	
119	WASHER, FIBER		4	
120				
121	LUG, SOLDER		1	
122	WIRE, INSULATED		A/R	
123	TUBING, SHRINK		A/R	
124	GLUE		A/R	USE WITH L1
125				
126				
127				
128				
	SCHEMATIC	200264	REF	REV C
	ARTWORK	200261	REF	

MATERIAL LIST

TITLE	DWG NO.	REV	SHEET
ASSEMBLY, PCB DATA AND INTERFACE	200263-001	A	SHEET 1 OF 1
MODEL 270 SINGLE DENSITY	PERSCI, INC.		

ITEM NO.	DRAWING TITLE	DWG NO.	QTY	REMARKS
	USE BASIC BD 200263-000			
	LATEST REVISION AND			
	ADD THE FOLLOWING:			
1				
2				
3	CAPACITOR, TANTL., 10% 0.1UF	150100-104	1	C36
4	CAPACITOR, TANTL., 10% 0.1UF	150100-104	1	C41
5				
6	RESISTOR ¼ W., 5% 36K	150000-363	1	R94
7				
8	WIRE, INSULATED AWG 24		A/R	JUMPER FROM A TO B
				JUMPER FROM D TO E
				JUMPER FROM F TO G
	TARELL is -001			JUMPER FROM H TO J
				JUMPER FROM M TO P
				JUMPER FROM R TO S
				JUMPER FROM W TO X
				JUMPER FROM AB TO AX
				JUMPER FROM AD TO AE
				JUMPER FROM AH TO AJ
				JUMPER FROM AL TO AM
				JUMPER FROM AY TO AT
				JUMPER FROM AV TO AW
				JUMPER FROM BA TO BC
				JUMPER FROM BD TO BE
				CHASSIS GND W1
	NOTE: JUMPER POINTS NOT LISTED			
	ARE OPEN (NOT USED)			

A

200263-00

REV B

DWG NO. 200263-001

MATERIAL LIST

TITLE	DWG NO.	REV	SHEET
ASSEMBLY, PCB DATA AND INTERFACE	200263-001	B	SHEET 1 OF 1
MODEL 270/272 SINGLE DENSITY	PERSCI, INC.		

ITEM NO.	DRAWING TITLE	DWG NO.	QTY	REMARKS
	USE BASIC BD 200263-000			
	LATEST REVISION AND			
	ADD THE FOLLOWING:			
1				
2				
3	CAPACITOR, TANTL., 10% 0.1UF	150100-104	1	C36
4	CAPACITOR, TANTL., 10% 0.1UF	150100-104	2	C40,41
5				
6	RESISTOR ¼ W., 5% 36K	150000-363	2	R88,94
7				
8	WIRE, INSULATED AWG 24		A/R	JUMPER FROM A TO B
				JUMPER FROM D TO E
				JUMPER FROM F TO G
				JUMPER FROM H TO J
				JUMPER FROM M TO P
				JUMPER FROM R TO S
				JUMPER FROM W TO X
				JUMPER FROM AB TO AC
				JUMPER FROM AD TO AE
				JUMPER FROM AH TO AJ
				JUMPER FROM AL TO AM
				JUMPER FROM AY TO AT
				JUMPER FROM AV TO AW
				JUMPER FROM BA TO BB
				JUMPER FROM BD TO BE
				JUMPER FROM BK TO BM
				CHASSIS GND W1
	NOTE: JUMPER POINTS NOT LISTED			
	ARE OPEN (NOT USED)			

REV A

DWG NO. 200263-00[illegible]

MATERIAL LIST

TITLE	DWG NO.	REV	SHEET
ASSEMBLY, PCB DATA AND INTERFACE	200263-002	A	SHEET 1 OF 1
MODEL 270 DOUBLE DENSITY	PERSCI, INC.		

ITEM NO.	DRAWING TITLE		DWG NO.	QTY	REMARKS
	USE BASIC BD 200263-000				
	LATEST REVISION AND				
	ADD THE FOLLOWING:				
1	IC	74193	150614	1	U16
2					
3	CAPACITOR, TANTL., 10%	0.1UF	150100-104	1	C36
4	CAPACITOR, TANTL., 10%	1UF	150100-105	1	C41
5					
6	RESISTOR, ¼ W., 5%	11K	150000-113	1	R94
7					
8	WIRE, INSULATED AWG 24			A/R	JUMPER FROM A TO B
					JUMPER FROM D TO E
					JUMPER FROM F TO G
					JUMPER FROM H TO J
					JUMPER FROM M TO P
					JUMPER FROM R TO S
					JUMPER FROM W TO Y
					JUMPER FROM AA TO AB
					JUMPER FROM AD TO AF
					JUMPER FROM AH TO AK
					JUMPER FROM AL TO AM
					JUMPER FROM AT TO AY
					JUMPER FROM AV TO AW
					JUMPER FROM BA TO BB
					JUMPER FROM BD TO BE
					JUMPER FROM BH TO BJ
					CHASSIS GND W1
					SECTOR JUMPER #16
	NOTE: JUMPER POINTS NOT LISTED				
	ARE OPEN (NOT USED)				

REV B

DWG NO. 200263-002

MATERIAL LIST

TITLE	DWG NO.	REV	SHEET
ASSEMBLY, PCB DATA AND INTERFACE	200263-002	B	1 OF 1
MODEL 270 DOUBLE DENSITY	PERSCI, INC.		

ITEM NO.	DRAWING TITLE	DWG NO.	QTY	REMARKS
	USE BASIC BD 200263-000			
	LATEST REVISION AND			
	ADD THE FOLLOWING:			
1	IC 74193	150614	2	U16,27
2				
3	CAPACITOR, TANTL., 10% 0.1UF	150100-104	1	C36
4	CAPACITOR, TANTL., 10% 1UF	150100-105	2	C40,41
5				
6	RESISTOR, ¼ W., 5% 11K	150000-113	2	R88,94
7				
8	WIRE, INSULATED AWG 24		A/R	JUMPER FROM A TO B
				JUMPER FROM D TO E
				JUMPER FROM F TO G
				JUMPER FROM H TO J
				JUMPER FROM M TO P
				JUMPER FROM R TO S
				JUMPER FROM W TO Y
				JUMPER FROM AA TO AB
				JUMPER FROM AD TO AF
				JUMPER FROM AH TO AK
				JUMPER FROM AL TO AM
				JUMPER FROM AT TO AY
				JUMPER FROM AV TO AW
				JUMPER FROM BA TO BB
				JUMPER FROM BD TO BE
				JUMPER FROM BH TO BJ
				JUMPER FROM BK TO BM
				SECTOR "0" JUMPER 16
	NOTE: JUMPER POINTS NOT LISTED			SECTOR "1" JUMPER 16
	ARE OPEN (NOT USED)			CHASSIS GND W1

MATERIAL LIST

TITLE	DWG NO.	REV	SHEET
ASSEMBLY, PCB DATA AND INTERFACE	200263-003	B	1 OF 1
MODEL 270 ROTARY SELECT	PERSCI, INC.		

ITEM NO.	DRAWING TITLE	DWG NO.	QTY	REMARKS
	USE BASIC BD 200263-000			
	LATEST REVISION AND			
	ADD THE FOLLOWING:			
1				
2				
3				
4	CAPACITOR, TANTL., 10% 0.1UF	150100-104	1	C41
5				
6	RESISTOR, ¼ W., 5% 36K	150000-363	1	R94
7	MODULE, SELECT	200288-005	1	U11
8	WIRE, INSULATED, AWG 24		A/R	JUMPER FROM A TO B
				JUMPER FROM J TO Z
				JUMPER FROM K TO L
				JUMPER FROM N TO P
				JUMPER FROM S TO T
				JUMPER FROM U TO V
				JUMPER FROM W TO X
				JUMPER FROM AB TO AX
				JUMPER FROM AD TO AE
				JUMPER FROM AH TO AJ
				JUMPER FROM AM TO AN
				JUMPER FROM AP TO AR
				JUMPER FROM AS TO AT
				JUMPER FROM AV TO AW
				JUMPER FROM BA TO BC
				JUMPER FROM BD TO BE
				CHASSIS GND W1
	NOTE: JUMPER POINTS NOT LISTED			
	ARE OPEN (NOT USED)			

DWG NO. 200263- REV B

REV E

DWG NO. 200263-003

MATERIAL LIST

TITLE	DWG NO.	REV	SHEET
ASSEMBLY, PCB DATA AND INTERFACE	200263-003	E	SHEET 1 OF 1
MODEL 277 ROTARY SELECT	PERSCI, INC.		

ITEM NO.	DRAWING TITLE	DWG NO.	QTY	REMARKS
	USE BASIC BD 200263-000			
	LATEST REVISION AND			
	ADD THE FOLLOWING:			
1				
2				
3				
4	CAPACITOR, TANTL., 10% 0.1UF	150100-104	3	C40,41,36
5				
6	RESISTOR, ¼ W., 5% 36K	150000-363	2	R38,94
7	MODULE, SELECT	200288-005	1	U11
8	WIRE, INSULATED, AWG 24		A/R	JUMPER FROM A TO B
				JUMPER FROM J TO Z
				JUMPER FROM K TO L
				JUMPER FROM N TO P
				JUMPER FROM S TO T
				JUMPER FROM U TO V
				JUMPER FROM W TO X
				JUMPER FROM AB TO AC
				JUMPER FROM AD TO AE
				JUMPER FROM AH TO AJ
				JUMPER FROM AM TO AN
				JUMPER FROM AP TO AR
				JUMPER FROM AS TO AT
				JUMPER FROM AV TO AW
				JUMPER FROM BA TO BB
				JUMPER FROM BD TO BE
				JUMPER FROM BK TO BM
				CHASSIS GND W1
	NOTE: JUMPER POINTS NOT LISTED			
	ARE OPEN (NOT USED)			

REV B

DWG NO. 200263-004

MATERIAL LIST

TITLE	DWG NO.	REV	SHEET
ASSEMBLY, PCB DATA AND INTERFACE	200263-004	B	SHEET 1 OF 1
MODEL 270 ROTARY SELECT, PULSE DIRECTION	PERSCI, INC.		

ITEM NO.	DRAWING TITLE	DWG NO.	QTY	REMARKS
	USE BASIC BD 200263-000			
	LATEST REVISION AND			
	ADD THE FOLLOWING:			
1				
2				
3				
4	CAPACITOR, TANTL., 10% 0.1UF	150100-104	1	C41
5				
6	RESISTOR, ¼ W., 5% 36K	150000-363	1	R94
7	MODULE, SELECT	200288-005	1	U11
8	WIRE, INSULATED, AWG 24		A/R	JUMPER FROM A TO B
				JUMPER FROM J TO Z
				JUMPER FROM K TO L
				JUMPER FROM N TO P
				JUMPER FROM S TO T
				JUMPER FROM U TO V
				JUMPER FROM W TO X
				JUMPER FROM AB TO AX
				JUMPER FROM AD TO AE
				JUMPER FROM AH TO AJ
				JUMPER FROM AM TO AN
				JUMPER FROM AP TO AR
				JUMPER FROM AS TO AT
				JUMPER FROM AW TO AU
				JUMPER FROM BA TO BC
				JUMPER FROM BD TO BE
				CHASSIS GND W1
	NOTE: JUMPER POINTS NOT LISTED			
	ARE OPEN (NOT USED)			

MATERIAL LIST

TITLE	DWG NO.	REV	SHEET
ASSEMBLY, PCB DATA AND INTERFACE	200263-005	A	1 OF 1
MODEL 270	PERSCI, INC.		

ITEM NO.	DRAWING TITLE	DWG NO.	QTY	REMARKS
	USE BASIC BD 200263-000			
	LATEST REVISION AND			
	ADD THE FOLLOWING:			
1	IC 74193	150614	1	U16
2				
3	CAPACITOR, TANTL., 10% 0.1UF	150100-104	1	C36
4	CAPACITOR, TANTL., 10% 1UF	150100-105	1	C41
5				
6	RESISTOR, ¼W., 5% 11K	150000-113	1	R94
7				
8	WIRE, INSULATED, AWG 24		A/R	JUMPER FROM A TO B
				JUMPER FROM D TO E
				JUMPER FROM F TO G
				JUMPER FROM H TO J
				JUMPER FROM M TO P
				JUMPER FROM R TO S
				JUMPER FROM W TO Y
				JUMPER FROM AA TO AB
				JUMPER FROM AD TO AF
				JUMPER FROM AH TO AK
				JUMPER FROM AL TO AM
				JUMPER FROM AT TO AY
				JUMPER FROM AV TO AW
				JUMPER FROM BA TO BB
				JUMPER FROM BD TO BE
				JUMPER FROM BH TO BF
				CHASSIS GND W1
				SECTOR JUMPER #16
	NOTE: JUMPER POINTS NOT LISTED			
	ARE OPEN (NOT USED)			

REV B

DWG NO. 200263-005

MATERIAL LIST

TITLE	DWG NO.	REV	SHEET
ASSEMBLY, PCB DATA AND INTERFACE	200263-005	B	SHEET 1 OF 1
MODEL 270, 16 SECTORS	PERSCI, INC.		

ITEM NO.	DRAWING TITLE	DWG NO.	QTY	REMARKS
	USE BASIC BD 200263-000			
	LATEST REVISION AND			
	ADD THE FOLLOWING:			
1	IC 74193	150614	2	U16,27
2				
3	CAPACITOR, TANTL., 10% 0.1UF	150100-104	1	C36
4	CAPACITOR, TANTL., 10% 1UF	150100-105	2	C40,41
5				
6	RESISTOR, ¼W., 5% 11K	150000-113	2	R88,94
7				
8	WIRE, INSULATED, AWG 24		A/R	JUMPER FROM A TO B
				JUMPER FROM D TO E
				JUMPER FROM F TO G
				JUMPER FROM H TO J
				JUMPER FROM M TO P
				JUMPER FROM R TO S
				JUMPER FROM W TO Y
				JUMPER FROM AA TO AB
				JUMPER FROM AD TO AF
				JUMPER FROM AH TO AK
				JUMPER FROM AL TO AM
				JUMPER FROM AT TO AY
				JUMPER FROM AV TO AW
				JUMPER FROM BA TO BB
				JUMPER FROM BD TO BE
				JUMPER FROM BH TO BF
				JUMPER FROM BK TO BM
				SECTOR "0" JUMPER 16
				SECTOR "1" JUMPER 16
	NOTE: JUMPER POINTS NOT LISTED			CHASSIS GND W1
	ARE OPEN (NOT USED)			

REV A

DWG NO. 200263-00b

MATERIAL LIST

TITLE	DWG NO.	REV	SHEET
ASSEMBLY, PCB DATA AND INTERFACE	200263-006	A	SHEET 1 OF 1
MODEL 270 ROTARY SELECT, PULSE DIRECTION, SOFT MEM	PERSCI, INC.		

ITEM NO.	DRAWING TITLE	DWG NO.	QTY	REMARKS
	USE BASIC BD 200263-000			
	LATEST REVISION AND			
	ADD THE FOLLOWING:			
1				
2				
3				
4	CAPACITOR, TANTL., 10% 0.1UF	150100-104	1	C41
5				
6	RESISTOR, ¼ W., 5% 36K	150000-363	1	R94
7				
8	WIRE, INSULATED, AWG 24		A/R	JUMPER FROM A TO B
				JUMPER FROM J TO Z
				JUMPER FROM K TO L
				JUMPER FROM N TO P
				JUMPER FROM S TO T
				JUMPER FROM U TO V
				JUMPER FROM W TO X
				JUMPER FROM AB TO AX
				JUMPER FROM AD TO AE
				JUMPER FROM AH TO AJ
				JUMPER FROM AM TO AN
				JUMPER FROM AP TO AR
				JUMPER FROM AW TO AU
				JUMPER FROM BA TO BC
				JUMPER FROM BD TO BE
				JUMPER FROM BH TO BF
				CHASSIS GND W1
	NOTE: JUMPER POINTS NOT LISTED			
	ARE OPEN (NOT USED)			

REV B

DWG NO. 200263- /

MATERIAL LIST

TITLE	DWG NO.	REV	SHEET
ASSEMBLY, PCB DATA AND INTERFACE	200263-007	B	SHEET 1 OF 1
MODEL 270 HARD SECTOR 32 SECTORS	PERSCI, INC.		

ITEM NO.	DRAWING TITLE	DWG NO.	QTY	REMARKS
	USE BASIC BD 200263-000			
	LATEST REVISION AND ADD			
	THE FOLLOWING:			
1	ASSY, SELECT MODULE	200288-003	1	U11
2				
3	CAPACITOR, TANTL., 10% 0.1UF	150100-104	1	C36
4	CAPACITOR, TANTL., 10% 1UF	150100-105	1	C41
5				
6	RESISTOR, ¼ W., 5% 11K	150000-113	1	R94
7				
8	WIRE, INSULATED, AWG 24		A/R	JUMPER FROM A TO B
			A/R	JUMPER FROM D TO E
			A/R	JUMPER FROM F TO G
	⇒ HELIOS USES -007 board		A/R	JUMPER FROM H TO J
			A/R	JUMPER FROM M TO P
			A/R	JUMPER FROM R TO S
			A/R	JUMPER FROM W TO Y
			A/R	JUMPER FROM AA TO AB
			A/R	JUMPER FROM AD TO AF
			A/R	JUMPER FROM AH TO AK
			A/R	JUMPER FROM AL TO AM
			A/R	JUMPER FROM AT TO AY
			A/R	JUMPER FROM AV TO AW
			A/R	JUMPER FROM BA TO BB
			A/R	JUMPER FROM BD TO BE
			A/R	JUMPER FROM BH TO BJ
			A/R	CHASSIS GND W1
			A/R	SECTOR JUMPER #32
	NOTE: JUMPER POINTS NOT LISTED			
	ARE OPEN (NOT USED)			

REV D

DWG NO. 200263-007

MATERIAL LIST

TITLE	DWG NO.	REV	SHEET
ASSEMBLY, PCB DATA AND INTERFACE	200263-007	D	SHEET 1 OF 1

MODEL 270 HARD SECTOR 32 SECTORS

PERSCI, INC.

ITEM NO.	DRAWING TITLE	DWG NO.	QTY	REMARKS
	USE BASIC BD 200263-000			
	LATEST REVISION AND ADD			
	THE FOLLOWING:			
1	ASSY, SELECT MODULE	200288-003	1	U11
2				
3	CAPACITOR, TANTL., 10% 0.1UF	150100-104	1	C36
4	CAPACITOR, TANTL., 10% 1UF	150100-105	2	C40,41
5				
6	RESISTOR, ¼ W., 5% 11K	150000-113	2	R88,94
7				
8	WIRE, INSULATED, AWG 24		A/R	JUMPER FROM A TO B
				JUMPER FROM D TO E
				JUMPER FROM F TO G
				JUMPER FROM H TO J
				JUMPER FROM M TO P
				JUMPER FROM R TO S
				JUMPER FROM W TO Y
				JUMPER FROM AA TO AB
				JUMPER FROM AD TO AF
				JUMPER FROM AH TO AK
				JUMPER FROM AL TO AM
				JUMPER FROM AT TO AY
				JUMPER FROM AU TO AW
				JUMPER FROM BA TO BB
				JUMPER FROM BD TO BE
				JUMPER FROM BH TO BJ
				JUMPER FROM BK TO BM
				SECTOR "0" JUMPER 32
	NOTE: JUMPER POINTS NOT LISTED			SECTOR "1" JUMPER 32
	ARE OPEN (NOT USED)			CHASSIS GND W1

REV B

DWG NO. 200263-008

MATERIAL LIST

TITLE	DWG NO.	REV	SHEET
ASSEMBLY, PCB DATA AND INTERFACE	200263-008	B	SHEET 1 OF 1

MODEL 270 SINGLE DENSITY, SELECTABLE DRIVE

PERSCI, INC.

ITEM NO.	DRAWING TITLE	DWG NO.	QTY	REMARKS
	USE BASIC BD 200263-000			
	LATEST REVISION AND			
	ADD THE FOLLOWING:			
1	ASSY., SELECT MODULE	200288-003	1	U11
2				
3	CAPACITOR, TANTL., 10% 0.1UF	150100-104	1	C36
4	CAPACITOR, TANTL., 10% 0.1UF	150100-104	2	C40,41
5				
6	RESISTOR, ¼ W., 5% 36K	150000-363	2	R88,94
7				
8	WIRE, INSULATED AWG 24		A/R	JUMPER FROM A TO B
				JUMPER FROM D TO E
				JUMPER FROM F TO G
				JUMPER FROM H TO J
				JUMPER FROM M TO P
				JUMPER FROM R TO S
				JUMPER FROM W TO X
				JUMPER FROM AB TO AC
				JUMPER FROM AD TO AE
				JUMPER FROM AH TO AJ
				JUMPER FROM AL TO AM
				JUMPER FROM AY TO AT
				JUMPER FROM AV TO AW
				JUMPER FROM BA TO BB
				JUMPER FROM BD TO BE
				JUMPER FROM BK TO BM
				CHASSIS GND W1
	NOTE: JUMPER POINTS NOT LISTED			
	ARE OPEN (NOT USED)			

REV B

DWG NO. 200263-009

MATERIAL LIST

TITLE	DWG NO.	REV	SHEET
ASSEMBLY, PCB DATA AND INTERFACE	200263-009	B	SHEET 1 OF 1
MODEL 270 SELECTABLE DRIVE, 16 SEPARATED SECTORS	PERSCI, INC.		

ITEM NO.	DRAWING TITLE		DWG NO.	QTY	REMARKS
	USE BASIC BD 200263-000				
	LATEST REVISION AND				
	ADD THE FOLLOWING:				
1	IC	74193	150614	2	U16,27
2					
3	CAPACITOR, TANTL., 10%	0.1UF	150100-104	1	C36
4	CAPACITOR, TANTL., 10%	1UF	150100-105	2	C40,41
5					
6	RESISTOR, ¼ W., 5%	11K	150000-113	2	R88,94
7	ASSY., SELECT MODULE		200288-003	1	U11
8	WIRE, INSULATED AWG 24			A/R	JUMPER FROM A TO B
					JUMPER FROM D TO E
					JUMPER FROM F TO G
					JUMPER FROM H TO J
					JUMPER FROM M TO P
					JUMPER FROM R TO S
					JUMPER FROM W TO Y
					JUMPER FROM AA TO AB
					JUMPER FROM AD TO AF
					JUMPER FROM AH TO AK
					JUMPER FROM AL TO AM
					JUMPER FROM AT TO AY
					JUMPER FROM AV TO AW
					JUMPER FROM BA TO BB
					JUMPER FROM BD TO BE
					JUMPER FROM BH TO BJ
					JUMPER FROM BK TO BM
					SECTOR "0" JUMPER 16
					SECTOR "1" JUMPER 16
	NOTE: JUMPER POINTS NOT LISTED				CHASSIS GND W1
	ARE OPEN (NOT USED)				

REV C

DWG NO. 200263-009

MATERIAL LIST

TITLE	DWG NO.	REV	SHEET
ASSEMBLY, PCB DATA AND INTERFACE	200263-009	C	SHEET 1 OF 1
MODEL 270 SELECTABLE DRIVE, 16 SEPARATED SECTORS	PERSCI, INC.		

ITEM NO.	DRAWING TITLE		DWG NO.	QTY	REMARKS
	USE BASIC BD 200263-000				
	LATEST REVISION AND				
	ADD THE FOLLOWING:				
1	IC	74193	150614	2	U16,27
2	IC	75453	150618	1	U59 'DELETE'
3	CAPACITOR, TANTL., 10%	0.1UF	150100-104	1	C36
4	CAPACITOR, TANTL., 10%	1UF	150100-105	2	C40,41
5					
6	RESISTOR, ¼ W., 5%	11K	150000-113	2	R88,94
7	ASSY., SELECT MODULE		200288-003	1	U11
8	WIRE, INSULATED AWG 24			A/R	JUMPER FROM A TO B
					JUMPER FROM D TO E
					JUMPER FROM F TO G
					JUMPER FROM H TO J
					JUMPER FROM M TO P
					JUMPER FROM R TO S
					JUMPER FROM W TO Y
					JUMPER FROM AA TO AB
					JUMPER FROM AD TO AF
					JUMPER FROM AH TO AK
					JUMPER FROM AL TO AM
					JUMPER FROM AT TO AY
					JUMPER FROM AV TO AW
					JUMPER FROM BA TO BB
					JUMPER FROM BD TO BE
					JUMPER FROM BH TO BJ
					JUMPER FROM BK TO BM
					SECTOR "0" JUMPER 16
					SECTOR "1" JUMPER 16
	NOTE: JUMPER POINTS NOT LISTED				CHASSIS GND W1
	ARE OPEN (NOT USED)				

REV B

DWG NO. 200263-010

MATERIAL LIST

TITLE	DWG NO.	REV	SHEET
ASSEMBLY, PCB DATA AND INTERFACE	200263-010	B	SHEET 1 OF 1
MODEL 277 HARD SECTOR 32 SECTOR ROTARY SELECT	PERSCI, INC.		

ITEM NO.	DRAWING TITLE	DWG NO.	QTY	REMARKS
	USE BASIC BD 200263-000			
	LATEST REVISION AND			
	ADD THE FOLLOWING:			
1				
2				
3	CAPACITOR, TANTL., 10% 0.1UF	150100-104	1	C36
4	CAPACITOR, TANTL., 10% 1.0UF	150100-105	2	C40,41
5				
6	RESISTOR, ¼ W., 5% 11K	150000-113	2	R88,94
7	MODULE, SELECT	200288-005	1	U11
8	WIRE, INSULATED, AWG 24		A/R	JUMPER FROM A TO B
				JUMPER FROM J TO Z
				JUMPER FROM K TO L
				JUMPER FROM N TO P
				JUMPER FROM S TO T
				JUMPER FROM W TO Y
				JUMPER FROM AA TO AB
				JUMPER FROM AD TO AF
				JUMPER FROM AH TO AK
				JUMPER FROM AM TO AN
				JUMPER FROM AP TO AR
				JUMPER FROM AS TO AT
				JUMPER FROM AV TO AW
				JUMPER FROM BC TO BB
				JUMPER FROM BD TO BE
				JUMPER FROM BL TO BM
				SECTOR "0" JUMPER 32
				SECTOR "1" JUMPER 32
	NOTE: JUMPER POINTS NOT LISTED			CHASSIS GND W1
	ARE OPEN (NOT USED)			

REV B

DWG NO. 200263-011

MATERIAL LIST

TITLE	DWG NO.	REV	SHEET
ASSEMBLY, PCB DATA AND INTERFACE	200263-011	B	1 OF 1
MODEL 277 ROTARY SELECT MFM 32 SECTOR	PERSCI, INC.		

ITEM NO.	DRAWING TITLE	DWG NO.	QTY	REMARKS
	USE BASIC BD 200263-000			
	LATEST REVISION AND			
	ADD THE FOLLOWING:			
1				
2				
3	CAPACITOR, TANTL., 10% 0.1UF	150100-104	1	C36
4	CAPACITOR, TANTL., 10% 1.0UF	150100-105	2	C40,41
5				
6	RESISTOR, ¼ W., 5% 11K	150000-113	2	R88,94
7	MODULE, SELECT	200288-005	1	U11
8	WIRE, INSULATED, AWG 24		A/R	JUMPER FROM A TO B
				JUMPER FROM J TO Z
				JUMPER FROM K TO L
				JUMPER FROM N TO P
				JUMPER FROM S TO T
				JUMPER FROM W TO Y
				JUMPER FROM AA TO AB
				JUMPER FROM AD TO AE
				JUMPER FROM AH TO AK
				JUMPER FROM AM TO AN
				JUMPER FROM AP TO AR
				JUMPER FROM AS TO AT
				JUMPER FROM AV TO AW
				JUMPER FROM BC TO BB
				JUMPER FROM BD TO BE
				JUMPER FROM BH TO BJ
				JUMPER FROM BL TO BM
				SECTOR "0" JUMPER 32
				SECTOR "1" JUMPER 32
	NOTE: JUMPER POINTS NOT LISTED			CHASSIS GND W1
	ARE OPEN (NOT USED)			

REV B

DWG NO. 200263-012

MATERIAL LIST

TITLE	DWG NO.	REV	SHEET
ASSEMBLY, PCB DATA AND INTERFACE	200263-012	B	SHEET 1 OF 1

MODEL 270 DOUBLE DENSITY
EXTERNAL PLO SYNC

PERSCI, INC.

ITEM NO.	DRAWING TITLE	DWG NO.	QTY	REMARKS
	USE BASIC BD 200263-000 REV "H"			
	OR LATER REVISION AND ADD THE			
	FOLLOWING:			
1				
2				
3	CAPACITOR, TANTL., 10% 0.1 UF	150100-104	1	C36
4	CAPACITOR, TANTL., 10% 0.1 UF	150100-104	2	C40, 41
5				
6	RESISTOR, ¼ W., 5% 36K	150000-363	2	R88, 94
7				
8	WIRE, INSULATED AWG 24		A/R	JUMPER FROM A TO B
				JUMPER FROM D TO E
				JUMPER FROM F TO G
				JUMPER FROM H TO J
				JUMPER FROM M TO P
				JUMPER FROM R TO S
				JUMPER FROM W TO X
				JUMPER FROM AB TO AC
				JUMPER FROM AD TO AE
				JUMPER FROM AH TO AJ
				JUMPER FROM AL TO AM
				JUMPER FROM AY TO AT
				JUMPER FROM AV TO AW
				JUMPER FROM BA TO BB
				JUMPER FROM BD TO BE
				JUMPER FROM BK TO BM
				CHASSIS GND W1
			*	JUMP BH TO U11 PIN 10
	NOTE: JUMPER POINTS NOT LISTED			
	ARE OPEN (NOT USED)			
	*INSTALL ON BACK SIDE OF PCB			

PERSCI, INC.

12210 Nebraska Ave
W Los Angeles
CA 90025

January, 1978